# THOMSON ICC19-100Hz

MODEL

SERVICE MANUAL

THOMSON MULTIMEDIA

Brandt FERGUSON NORDMENDE SABA TELEFUNKEN THOMSON

TV

# SERVICE MANUAL
# DOCUMENTATION TECHNIQUE
# TECHNISCHE DOKUMENTATION
# DOCUMENTAZIONE TECNICA
# DOCUMENTACION TECNICA

# ICC19 100 Hz

ICC19 B5B40240 00
B5BB0240 00
B5D80240 00
B5D80740 00
B5E80640 00
B5E80740 00
B5F80240 00

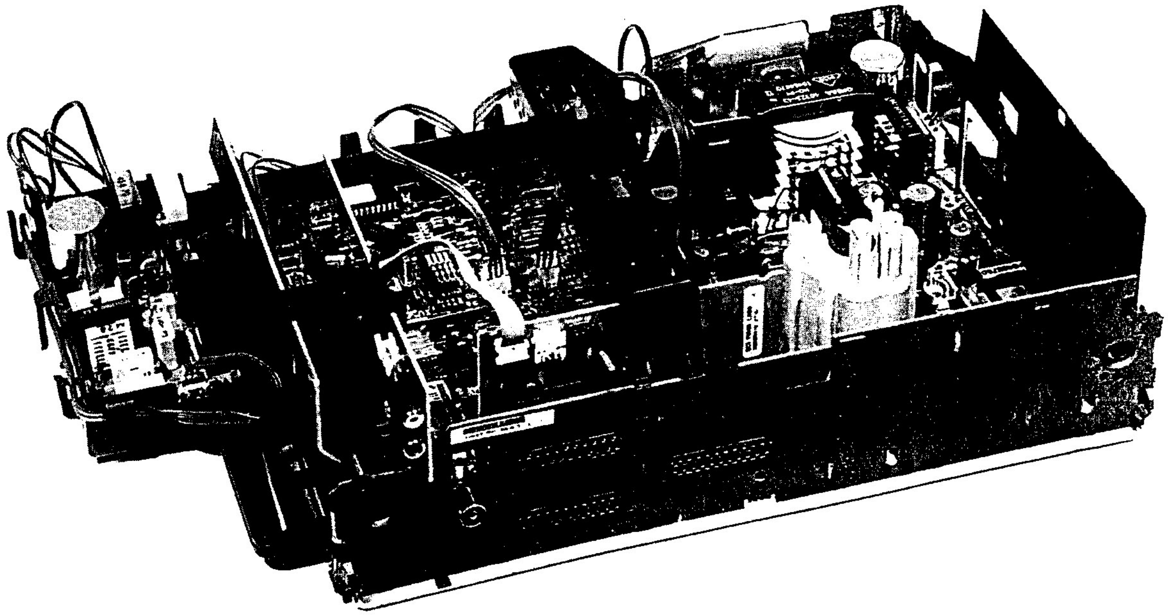

**WARNING :** *Before servicing this chassis read the safety recommendations.*
**ATTENTION :** *Avant toute intervention sur ce châssis, lire les recommandations de sécurité.*
**ACHTUNG :** *Vor jedem Eingriff auf diesem Chassis, die Sicherheitsvorschriften lesen.*
**ATTENZIONE :** *Prima di intervenire sullo chassis, leggere le norme di sicurezza.*
**IMPORTANTE :** *Antes de cualquier intervención, leer las recomendaciones de seguridad.*

⚠ Indicates critical safety components, and identical components should be used for replacement. Only then can the operational safety be garanteed.

Le remplacement des éléments de sécurité (repérés avec le symbole ⚠ ) par des composants non homologués selon la Norme CEI 65 entraine la non-conformité de l'appareil. Dans ce cas, la responsabilité du fabricant n'est plus engagée.

Wenn Sicherheitsteile (mit dem Symbol ⚠ gekennzeichnet) nicht durch Original - Ersatzteile ersetzt werden, erlischt die Haftung des Herstellers.

La sostituzione degli elementi di sicurezza (marcati con il segno ⚠) con componenti non omologati secondo la norma CEI 65 comporta la non conformitá dell'apparecchio. In tal caso è "esclusa la responsabilità " del costruttore.

La sustitución de elementos de seguridad (marcados con el simbolo ⚠) por componentes no homologados segun la norma CEI 65, provoca la no conformidad del aparato. En ese caso, el fabricante cesa de ser responsable.

## MEASUREMENT CONDITIONS - CONDITIONS DE MESURES - MESSBEDINGUNGEN
## CONDIZIONI DI MISURA - CONDICIONES DE MEDIDAS

**RECEIVER :** On UHF,input level : 1 mV, bar test pattern :
- PAL, I standard, 100% white.

Via the scart socket, input level : 1 Vpp, bar test pattern :

Colour, contrast and brightness at mid-position, sound at minimum.
Programme selected : PR 01.

DC voltages measured between the point and earth using a digital voltmeter.

**RECEPTEUR :** En UHF, niveau d'entrée 1 mV mire de barres
- SECAM, Norm L, Blanc 100%.

Par la prise Péritélévision, niveau d'entrée 1 Vcc, mire de barres .

Couleur, contraste, lumière à mi-course, son minimum.
Programme affecté PR 01.

Tensions continues relevées par rapport à la masse avec un voltmètre numérique.

**EMPFÄNGER :** Bei UHF Eingangspegel 1 mV, Farbbalken :
- PAL, Norm G, Weiss 100%.

Über die Scartbuchse : Eingangspegel 1 Vss, Farbbalken :

Farbe, Kontrast, Helligkeit in der Mitte des Bereichs, Ton auf Minimum.
Zugeordnetes Programm PR 01.

Gleichspannungen mit einem digitalen Voltmeter zur Masse gemessen.

**RICEVITORE :** In UHF, livello d'entrata 1 mV. monoscopio par barre :
- PAL, norma G. bianco 100%.

Par la presa SCART. livello d'entrata 1 Vcc. monoscopio per barre :

Colore, Contrasto. Luce a metā corsa, Suono minimo.
Programma designato PR 01.

Tensioni continue rilevate rispetto alla massa con un voltametro numerico.

**RECEPTOR :** En UHF, nivel de entrada 1 mV, mira de barras :
- PAL, norma G. blanco 100%.

Por la toma Peritelevision, nivel de entrada 1 Vpp mira de barra.

Color, Contraste, luz a mitad de carrera, Sonido minimo.
Programa afectado PR 01.

Tensiones continuas marcadas en relacion a la masa con un voltimetro digital.

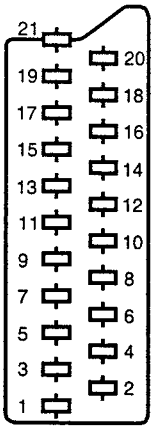


**NOTE :** (MAIN) ... etc. identifies each pcb module.

**NOTE :** (MAIN) ... etc. repères des platines constituant l'appareil.

**HINWEIS :** (MAIN) ...usw. Kennzeichnung der Platinen, aus denen das Gerät zusammengesetzt ist.

**NOTA :** (MAIN) ... ecc. indicazioni delle piastre che costituiscono l'apparecchio.

**NOTA :** (MAIN) ... etc. marcas de las placas que constituyen el aparato.

| | | ENGLISH | FRANÇAIS | DEUTSCH | ITALIANO | ESPAÑOL |
|---|---|---|---|---|---|---|
| 1 | OUTPUT | AUDIO "R" | AUDIO "D" | AUDIO "R" | AUDIO "D" | AUDIO "D" |
| 2 | INPUT | AUDIO "R" | AUDIO "D" | AUDIO "R" | AUDIO "D" | AUDIO "D" |
| 3 | OUTPUT | AUDIO "L" | AUDIO "G" | AUDIO "L" | AUDIO "S" | AUDIO "I" |
| 4 | EARTH | AUDIO | AUDIO | AUDIO | AUDIO | AUDIO |
| 5 | EARTH | " BLUE " | " BLEU " | "BLAU" | "BLU" | "AZUL" |
| 6 | INPUT | AUDIO "L" MONO | AUDIO "G" MONO | AUDIO "L" MONO | AUDIO "S" MONO | AUDIO "I" MONO |
| 7 | INPUT | " BLUE " | " BLEU " | "BLAU" | BLU | AZUL |
| 8 | INPUT | SLOW SWITCH | COMMUT. LENTE | AV UMSCHALTUNG | "COMMUTAZIONE LENTA" | "CONMUTACION LENTA" |
| 9 | EARTH | " GREEN " | "VERT" | "GRÜN" | "VERDE" | "VERDE" |
| 10 | NC | | | | | |
| 11 | INPUT | " GREEN " | "VERT"" | "GRÜN" | "VERDE" | "VERDE" |
| 12 | NC | | | | | |
| 13 | EARTH | " RED " | "ROUGE" | "ROT" | "ROSSO" | "ROJA" |
| 14 | NC | | | | | |
| 15 | INPUT | " RED " | "ROUGE" | "ROT" | "ROSSO" | "ROJA" |
| 16 | INPUT | FAST SWITCH | COMMUT. RAPIDE | AUSTASTUNG | "COMMUTAZIONE RAPIDA" | "CONMUTACION RAPIDA" |
| 17 | EARTH | VIDEO | VIDEO | VIDEO | VIDEO | VIDEO |
| 18 | EARTH | FAST SWITCH | COMMUT. RAPIDE | AUSTASTUNG | "COMMUTAZIONE RAPIDA" | "CONMUTACION RAPIDA" |
| 19 | OUTPUT | VIDEO | VIDEO | VIDEO | VIDEO | VIDEO |
| 20 | INPUT | VIDEO OR "SYNC" | VIDEO SYNCHRO | VIDEO ODER SYNCHRO | VIDEO O SINCRO | VIDEO O SINCRO |
| 21 | OUTPUT | PLUG SCREEN BOX | BLINDAGE PRISE | ABSCHIRMUNG DES STECKERS | ARMATURA DELLA SPINA | BLINDAJE DEL ENCHUFE |

OUTPUT : OUTPUT - SORTIE - AUSGANG - USCITA - SALIDA

INPUT : INPUT - ENTRÉE - EINGANG - ENTRATA - ENTRADA

EARTH : EARTH - MASSE - MASSE - MASSA - MASA

# INFORMATION - INFORMATIONS - INFORMATIONEN - INFORMAZIONE - INFORMACIONES

## CHASSIS DESIGNATION - DESIGNATION DES CHASSIS -BEZEICHNUNG DES CHASSIS - DESCRIZIONE DEI TELAI - DESIGNACIÓN DE LOS CHASIS

(GB)
The references mentioned on the cover give the list of chassis covered in the present document.
The designation of a specific chassis equipping the receptor is marked on the identification plate placed at the back of the apparatus.

(F)
Les références indiquées en couverture donnent la liste des chassis traités dans le présent document.
La désignation d'un chassis spécifique équipant le récepteur est inscrite sur la plaque signalétique située à l'arrière de l'appareil.

(D)
Die auf dem Deckblatt angegeben Nummern sind die in dieser Unterlage enthaltenen Chassis

(I)
I riferimenti indicati in copertina danno la lista dei telai trattati nel presente documento.
La descrizione di un telaio specifico installato sul ricevitore figura sulla targa delle caratteristiche situata sulla parte posteriore dell'apparecchio.

(E)
Las referencias indicadas en la cubierta dan la lista de los chasis tratados en el presente documento.
La designación de un chasis específico que equipa el receptor se inscribe en la placa del fabricante, situada en la parte trasera del aparato.

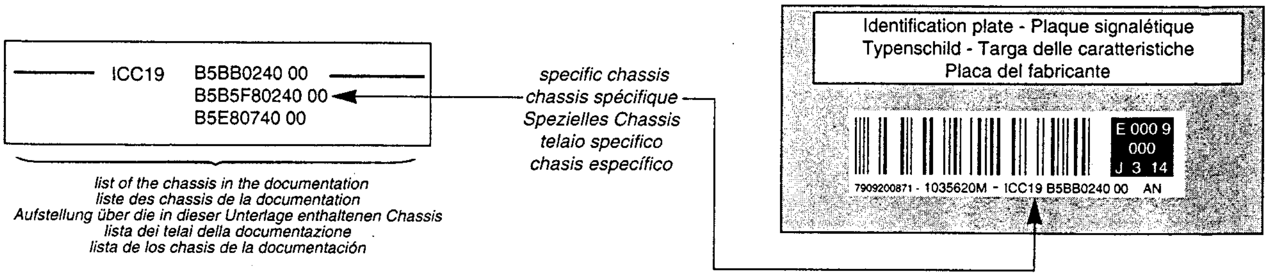


## RECEIVER COMPOSITION - COMPOSITION DES RECEPTEURS - BESTÜCKUNG DER EMPFÄNGER - COMPOSIZIONE DEI RICEVITOR - COMPOSICIÓN DE LOS RECEPTORES

Chassis identification table:
1- Main chassis designation code
2- Chassis configuration (modules) and the page number's where they are described.
3- The chassis - environment pair that are contained in the receptors described in the present documentation.

Le tableau ci-dessous regroupe :
1- La désignation des chassis
2- L'environnement électronique de chaque chassis (modules) et le numéro de page où il est décrit.
3- L'association chassis-environnement composant les récepteurs décrits dans la présente documentation.

Die nachfolgendeTabelle beinhaltet:
1 - Die Chassisbezeichnung
2 - Die elektrischen Baugruppen (Module) der Chassis und die Seitenzahl auf der sie abgebildet sind.
3 - Die Chassis und Module der Empfänger aus dieser Dokumentation.

La tabella qui di seguito contiene:
1 - La descrizione dei telai
2 - La configurazione di ogni telaio (moduli) e il numero di pagina nella quale è descritto
3 - L'abbinamento telaio-struttura che compone i ricevitori descritti nella presente documentazione

El cuadro siguiente agrupa:
1 - La designación de los chasis
2 - El entorno electrónico de cada chasis (módulos) y el número de página donde está descrito.
3 - La asociación chasis - entorno que compone los receptores descritos en la presente documentación

### ICC19 100 Hz

| DESCRIPTION CHASSIS | BLOCK DIAGRAM | ADJUST. MAIN | PCB MAIN | SCHEMA MAIN | VIDEO MODULE | CRT MODULE | AUDIO MODULE | TELETEXT MODULE | SCART MODULE | KDB - FCB KB |
|---|---|---|---|---|---|---|---|---|---|---|
| ICC19 B5B40240 00 | 5 to 6 | 7 to 16 | 17 to 23 | 24 to 30 | 31 to 35 | 36 to 38 | 39 to 41 | 42 to 44 | 45 to 47 | 48 to 50 |
| ICC19 B5BB0240 00 | 5 to 6 | 7 to 16 | 17 to 23 | 24 to 30 | 31 to 35 | 36 to 38 | 39 to 41 | 42 to 44 | 45 to 47 | 48 to 50 |
| ICC19 B5D80240 00 | 5 to 6 | 7 to 16 | 17 to 23 | 24 to 30 | 31 to 35 | 36 to 38 | 39 to 41 | 42 to 44 | 45 to 47 | 48 to 50 |
| ICC19 B5D80740 00 | 5 to 6 | 7 to 16 | 17 to 23 | 24 to 30 | 31 to 35 | 36 to 38 | 51 to 54 | 42 to 44 | 45 to 47 | 48 to 50 |
| ICC19 B5E80640 00 | 5 to 6 | 7 to 16 | 17 to 23 | 24 to 30 | 31 to 35 | 36 to 38 | 39 to 41 | 42 to 44 | 45 to 47 | 48 to 50 |
| ICC19 B5E80740 00 | 5 to 6 | 7 to 16 | 17 to 23 | 24 to 30 | 31 to 35 | 36 to 38 | 51 to 54 | 42 to 44 | 45 to 47 | 48 to 50 |
| ICC19 B5F80240 00 | 5 to 6 | 7 to 16 | 17 to 23 | 24 to 30 | 31 to 35 | 36 to 38 | 39 to 41 | 42 to 44 | 45 to 47 | 48 to 50 |

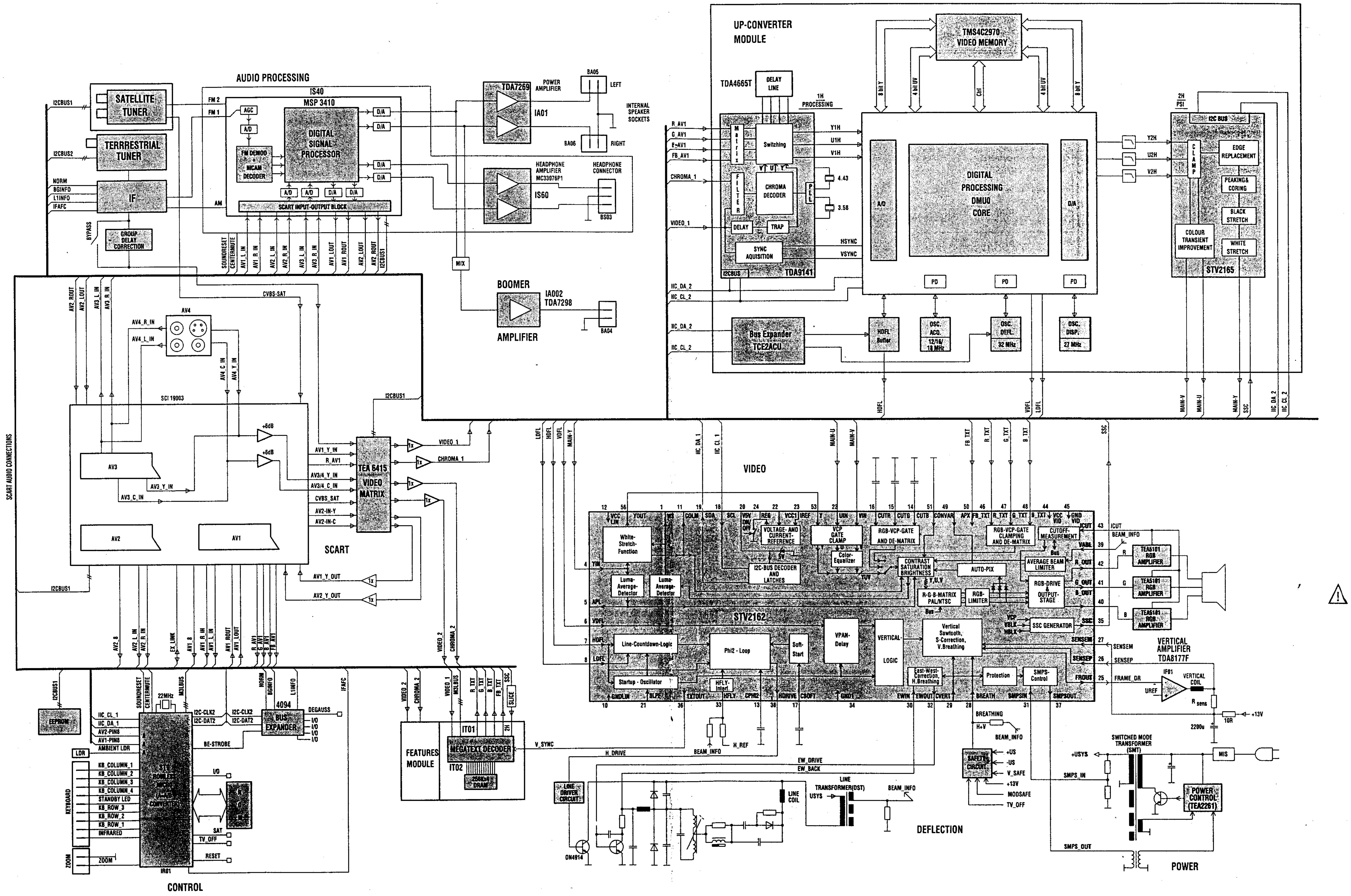


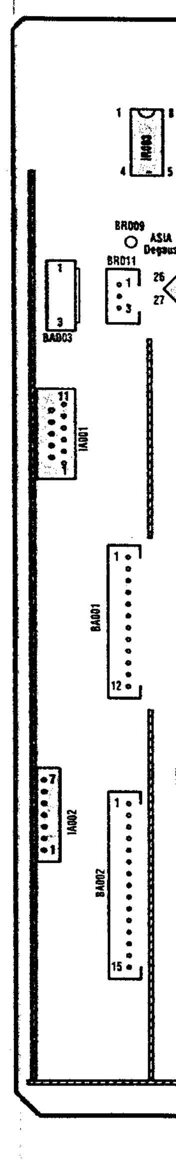

⚠ De not disconnect modules
Repairs on power supply s
only with isolating transfor

Ne pas retirer les modules
N'effectuer les travaux de r
reliée au secteur (Switch m
transformateur d'isolement

Module nicht bei eingescha
Servicearbeiten am Netztei
Regeltrenntrafos durchführ

Non scollegarei moduli qua
intraprendere riparazioni s
con transformatore isolante

No desconectar los módulo
Las reparaciones en la sec
deben ser ejecutadas sola
separacion.

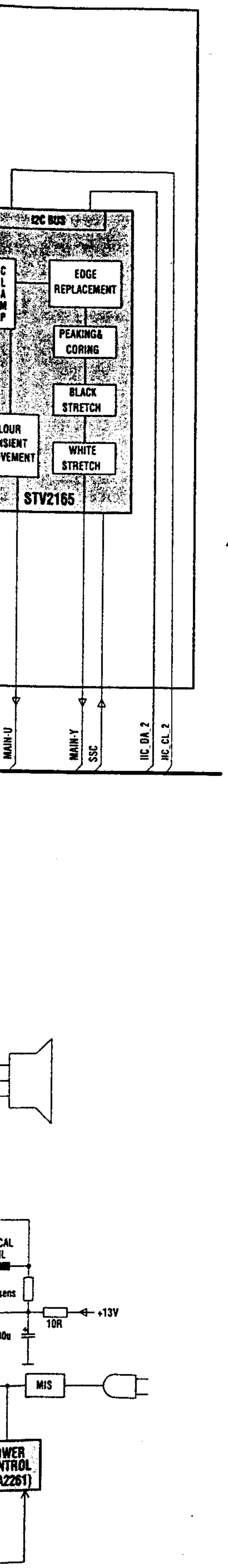

# LOCATION OF CONTROLS - EMPLACEMENT DES REGLAGES - SERVICE LAGEPLAN - POSIZIONE REGULATORI DI SERVIZIO - SITUACIÓN DE LOS AJUSTES

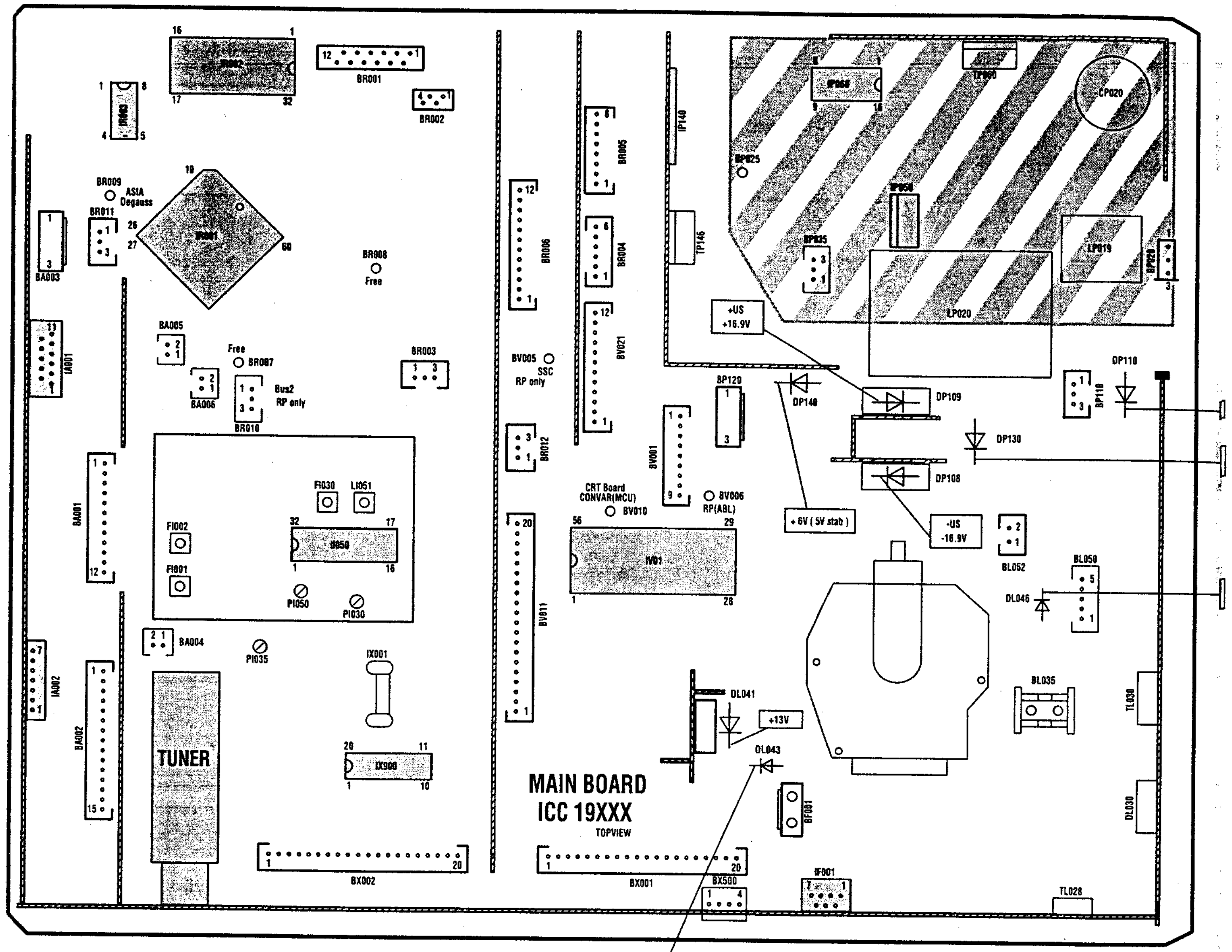


Do not disconnect modules when they are energized !
Repairs on power supply section are to be carried out only with isolating transformer.

Ne pas retirer les modules lorsqu'ils sont sous tension.
N'effectuer les travaux de maintenance sur la partie reliée au secteur (Switch mode) qu'au travers d'un transformateur d'isolement.

Module nicht bei eingeschaltetem Gerät entfernen !
Servcearbeiten am Netzteil nur unter Verwendung eines Regeltrenntrafos durchführen.

Non scollegarei moduli quando sono alimentati !
intraprendere riparazioni sulla sezione alimentatore solo con transformatore isolante.

No desconectar los módulos cuando están activados !
Las reparaciones en la sección de alimentación de energia deben ser ejecutadas solamente con un transformador de separacion.

Part of Board connected to mains supply.
Partie du châssis reliée au secteur.
Primärseitedes Netzteils
Parte del panello collegato alla rete di alimentazione
Parte del chasis conectada a la red

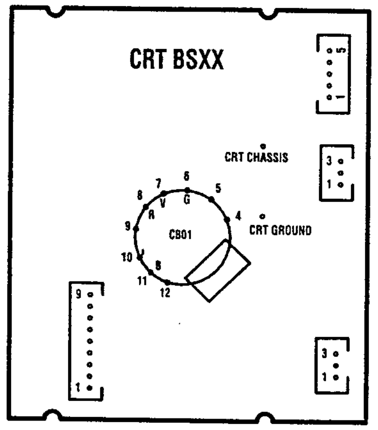


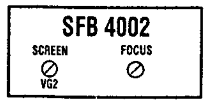




# ADJUSTMENTS - REGLAGES - EINSTELLUNGEN - REGOLAZIONE - AJUSTES

| | | | | |
|---|---|---|---|---|
| U Sys | SERVICE MODE | Standard TV - Settings : OMA Position<br>TV to AV1 : Black test pattern | 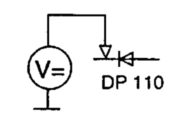 DP 110 | see tube table below |
| IF Alignment<br>VCO Standard BG | FI030 | Switch set to standard BG<br>IF Signal 38.9 MHz (BG) / TUNER / 11 / 30 mV / 75Ω / NH01 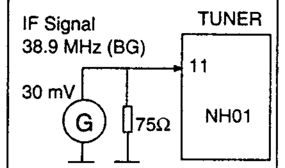 | 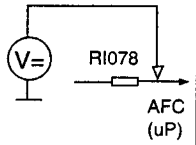 RI078 / AFC (uP) 42 IR01 | Adjust FI30 / PI54 for 2,5VDC +/-0.1V |
| VIDEO-LEVEL Alignment | PI030<br>PI035 | Standard Signal (BG / L) / 15kHz test pattern / TV set / Antenna / 3 mV / 75Ω 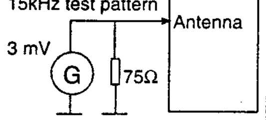 | 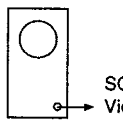 Oscillo. / SCART Video output | Adjust PI030 : standard BG<br>Adjust PI035 : standard L<br>for V = 0,7 Vpp ( Black/white level ) |
| U G2<br>METHOD 1<br>Measurment method | G2 potentiometer | Standard TV - Settings : OMA Position<br>TV to AV1 : Black test pattern | 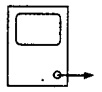 highest output<br>CRT 1910X (100Hz) :<br>R signal : IB01 Pin 15<br>G signal : IB03 Pin 15<br>B signal : IB02 Pin 15 | 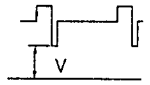 V<br>1 - Adjust VG2 : V= 160V +/- 5 V<br>2 - Adjust Focus<br>3 - Adjust VG2 : V= 160V +/- 3V |
| METHOD 2<br>Cutoff counter method<br>SERVICE MODE | SERVICE MODE | Standard TV - Settings : OMA Position<br>No test pattern ( generated by internal text processor). | 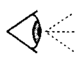 | Adjust R-Cut off and G-Cut-off to 80H temporary.<br>Select G2 Alignment in Service Mode<br>Adjust the lowest value to:<br>Select "Restore" in Service Mode and press "OK" to restore the cut-off values.<br>see Tube Type / Value table below |
| FOCUS | FOCUS | 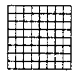 Test pattern (standard values) | 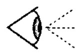 | Sharp picture |

| TUBE NAME | DESCRIPTION | Usys jumper | Usys |
|---|---|---|---|
| A66EGW 48X322 | 4/3 28" MP | JP915 | 134V +/- 0.5V |
| A59EGD048X322 | 4/3 25" SF | JP914 | 137V +/- 0.5V |
| A68EGD038X322 | 4/3 29" SF | JP914 | 137V +/-0.5V |
| A68EES038X322 | 4/3 29" SF | JP914 | 137V +/- 0.5V |
| W66EGV023X122 | 16/9 28" SF | JP915 | 134V +/- 0.5V |
| W76EGV023X122 | 16/9 32"SF | JP915 | 134V+/- 0.5V |
| W76EGV023X122 | 16/9 28"SF | JP915 | 134V +/- 0.5V |
| W76EGX023X122 | 16/9 32"SF | JP915 | 134V +/- 0.5V |

| Tube Type | Value |
|---|---|
| A66EGW | 60H |
| A59EGD | 50H |
| A68EGD | 50H |
| A68EES | - |
| W66EGV | 50H |
| W76EGV | 60H |
| A90AFF | 50H |
| RP 4/3 | - |
| RP 16/9 | - |

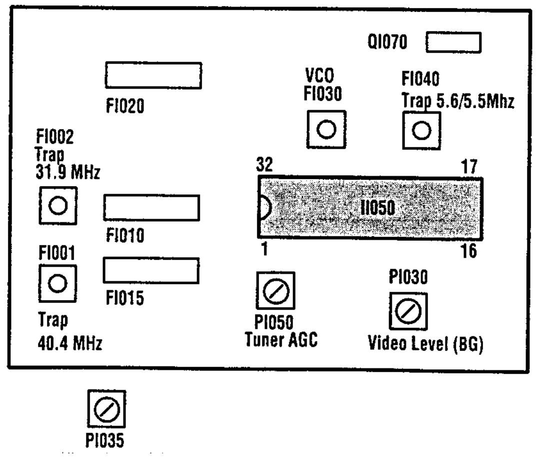

# SERVICE MODE (GB)

# MODE SERVICE (F)

# SERVICE - MODE (D)

# SERVICE - MODE (I)

# MODO SERVICIO

## I - ENTER/EXIT SERVICE MODE - ENTREE/SORTIE DU MODE SERVICE - EIN-AUSTIEG SERVICE MODE - ACCESSO/USCITA ALLA/DALLA FUNZIONE - ENTRADA/SALIDA MODO SERVICIO

### 1 ACCESSING SERVICE MODE

**TV Control Panel Access**

- Turn "Off" the TV using the **ON/OFF** button.
- Press the **PR-** and **VOL-** buttons, hold them down and switch "On" the TV with the **ON/OFF** button.
- After the normal switch on time the main service menu appears on the screen.

```
Soft-Ver.   V1.00-5   000A8 : 20
Config.     A1Z-DKC
Serial-No.  AGD45678

▷ QUIT
  TUBE
  SETUP
  GEOMETRY
  VIDEO
  ERROR

Δ UP   ∇ DOWN   ◁▷ SELECT
```

**Note :**

*In service mode :*
- *The child lock function is re-initialized*
- *The look function (PIN Number) is ignored.*
- *Clear any wake-up/sleep timers*
- *Pin 8 of the scart plug has to be ignored.*
- *AV- Link WSS detection , EPG and Teletext have to be disabled.*
- *Automatic stand-by functions, in case of no antenna signal have to be disabled.*
- *Contrast, colour, brightness : factory settings.*
- *Sharpness : middle (nominal)*
- *Contrast expander to low.*
- *Install Mode disabled.*
- *Default format and zoom..*

### 2 TEMPORARY EXIT FROM SERVICE MODE

- Press Exit on the Remote control.
- Everyday use menu can be accessed via Menu button.

- Field Service Menu can be re-entered via Blue button.

### 3 EXITING FROM SERVICE MODE

**Remote Control** → - Go to the point QUIT in the Field service Mode main menu. → - Press «<», «OK» or «>» button → - TV mode.

**TV control panel** → - Go to the point QUIT in the Field service Mode main menu. → - Press «VOL.+»button → - TV mode.

**on/off key or Stand-by** → - Stand-by function or «off» with on/off key. →

*Values or adjustments are no stored before exiting from service mode will not be written into the NVM*

### 1 ACCES AU MODE SERVICE

**Accès avec le clavier du téléviseur**

- Arrêter le TV avec la touche **M/A.**
- Tout en appuyant sur les touches **PR** - et **VOL -** , mettre le TV en service à l'aide de la touche **M/A.**
- Maintenir enfoncées les touches **PR** - et **VOL -**.
  Le menu suivant apparaît.

```
Soft-Ver.   V1.00-5   000A8 : 20
Config.     A1Z-DKC
Serial-No.  AGD45678

▷ QUIT
  TUBE
  SETUP
  GEOMETRY
  VIDEO
  ERROR

Δ UP   ∇ DOWN   ◁▷ SELECT
```

**Note :**

*En mode service:*
- *Le verrouillage parental est effacé ( réinitialisé ).*
- *La fonction de verrouillage ( Pin number ) est ignorée.*
- *La programmation des heures «reveille/matin» est annulée.*
- *Possibilité de passer en mode service avec commutation lente active.*
- *AV- Link , la détection WSS, l'EPG et le Vidéotexte ne sont pas validés.*
- *La fonction de stand-by automatique en cas d'absence de signal d'antenne n'est pas validée.*
- *Les valeurs de réglages usine sont affectées au contraste, à la couleur et à la lumière.*
- *Le contour est appelé à sa valeur moyenne.*
- *L'expansion contraste est au niveau bas.*
- *Le mode d'installation et l'ambiance «Light sensor» ne sont pas valdes.*
- *Zoom et format ignorées.*

### 2 SORTIE TEMPORAIRE DU MODE SERVICE

- Utiliser la touche Exit de la télécommande.
- Le menu utilisateur peut être accessible via la touche «Menu».

- Pour entrer à nouveau dans le mode service utiliser la touche bleue.

### 3 SORTIE DEFINITIVE DU MODE SERVICE

**télécommande** → - Aller au point «QUIT» dans le menu principal du mode service. → - Appuyer sur «<», «OK» ou «>» → - Mode TV.

**clavier du téléviseur** → - Aller au point «QUIT» dans le menu principal du mode service. → -Appuyer sur «VOL+» → - Mode TV.

**Inter M/A ou Stand-by** → - Foncion Stand-by ou «off» par M/A →

*Les valeurs ou réglages non mémorisées avant la sortie ne seront pas écrites en NVM.*

### 1 EINSTIEG IN DEN SERVICE MODE

**Zugriff über die Tastatur des Fernsehgeräts**

Fernsehgerät über die EIN/AUS - Taste ausschalten.
Gleichzeitig die Tasten PR- und VOL- drücken und den TV über die EIN/AUS-Taste einschalten.
Die Tasten PR- und VOL - gedrückt halten.

```
Soft-Ver.   V1.00-5   000A8 : 20
Config.     A1Z-DKC
Serial-No.  AGD45678

▷ QUIT
  TUBE
  SETUP
  GEOMETRY
  VIDEO
  ERROR

Δ UP   ∇ DOWN   ◁▷ SELECT
```

**Anmerkung :**

*Im SERVICE MODE :*
- *wird die Sperrfunktion (PIN-Nummer) ignoriert und die Kindersicherung gelöscht ( reinitialisiert ).*
- *werden alle Ein- und Ausschaltzeitgeber gelöscht.*
- *wird die SCART - Scaltspannung ignoriert.*
- *werden AV- Link WSS, EPG und Teletext gesperrt*
- *wird die Automatische Abschaltung bei fehlendem Antennensignal gesperrt.*
- *werden Kontrast, Farbe und Helligkeit auf standardwerte gesetzt.*
- *wird die bildschärfe auf Mittelstellung (nominal) gesetzt.*
- *wird der Kontrast-Expander auf "gering.." gesetzt.*
- *wird der Installations Modus gesperrt.*
- *wird das Standardformat bzw. der Standard-Zoom-modus gewählt.*

### 2 VORÜBERGEHENDES VERLASSEN DES SERVICE MODE

- Auf der Fernbedienung EXIT drücken.
- Mit der Taste Menü gelangen Sie zum Menü Übersicht

- Mit der blauen Taste gelangen sie zum Service-Menü.

### 3 ENDGÜLTIGES VERLASSEN DES SERVICE MODE

**Fernbedienung** → - Wenn der Zeiger im Hauptmenü des Service-Modus auf BEENDEN steht → - Taste «<», «OK» oder «>»drücken → - TV Modus

**TV-Bedienfeld** → - Wenn der Zeiger im Hauptmenü des Service-Modus auf BEENDEN steht → -Taste «VOL+» drücken → - TV Modus

**EIN /Aus - Taste** → - Mit Standby-Funktion oder EIN/AUS - taste ausschalten →

*Werte und Einstellungen, die nicht vor dem Verlassen des Service-Modus gespeichert wurden, werden nicht in den Permanentspeicher übernommen*

### 1 ACCESSO AL SERVICE MODO

**tramite i comandi del televisore**

- Spegnere il TV mediante il pulsante ON/OFF.
- Premere i tasti **PR- e VOL-** accendendo il TV con il pulsante ON/OFF.
- Premere i pulsanti **PR - e VOL -**.

```
Soft-Ver.   V1.00-5   000A8 : 20
Config.     A1Z-DKC
Serial-No.  AGD45678

▷ QUIT
  TUBE
  SETUP
  GEOMETRY
  VIDEO
  ERROR

Δ UP   ∇ DOWN   ◁▷ SELECT
```

**Nota :**

*Nel service mode:*
- *la funzione Blocco ( Numero Pin ) viene ignorata e la funzione Blocco Bambini è reinizializzata.*
- *Cancellare la programmazione sveglia*
- *Il piedino 8 della scart deve essere ignorato.*
- *I riconoscimenti AV-Link WSS, EPG e televideo devono essere disabilitati.*
- *Funzione automatica di standby, nel caso di mancanza del segnale d'antenna deve essere disabilitata.*
- *Contrasto, colore, luminosità : regolazioni di fabrica.*
- *Nitidezza: media (nominale)*
- *Espansore contrasto troppo basso.*
- *IModo Install disabilitato.*
- *Formato default e zoom.*

### 2 USCITA TEMPORANEA DAL SERVICE MODE

- Premere Exit sul telecomando.
- Al menu di uso quotidiano si accede attraverso il pulsante Menu.

- É possibile rientrate nel Menu Field Service attraverso il pulsante Blue.

### 3 USCIRE DAL SERVICE MODE

**telecomando** → - Andare al punto QUIT nel Modo Field service del Menu principale → - Premere «<»,«OK» o «>» → - Modo TV.

**Panello controllo TV** → - Andare al punto QUIT nel Modo Field service del Menu principale → - Premere «VOL.+» → - Modo TV.

**Tasto on/off di** → - Funzione Stand-by o «off» con il tasto on/off →

*Valori e regolazioni non vengono memorizzati prima di uscire dal Modo service e non vengono scritti nell'NVM*

### 1 ACCESO AL MODO SERVICIO

**Acceso panel control TV**

- Apague la **TV con el** botón MARCHA:PARAD
- Pulse los **botones PR - y VOL - y** sin soltar MARCHA:PARADA.
- Libere los **botones PR - y VOL -**.

```
Soft-Ver.   V1.00-5   000A8
Config.     A1Z-DKC
Serial-No.  AGD45678

▷ QUIT
  TUBE
  SETUP
  GEOMETRY
  VIDEO
  ERROR

Δ UP   ∇ DOWN   ◁▷ S
```

**Nota :**

*En modo servicio:*
- *Se ignora la función de bloqueo y se inicial ninos".*
- *Anula todos las horas programadas*
- *La patilla 8 del SCART es ignorada*
- *La detección WSS AV Link, EPG, y Telexto*
- *El apagado automático en caso de ausenc desactivado.*
- *El contraste,color y brillo son puestos a los*
- *la nitidez es puesta al punto medio.*
- *La expansión de contrast al nivel bajo*
- *Modo Instalación es desactivado.*
- *Zoom y formato ignorados.*

### 2 SALIDA TEMPORAL DEL MODO SERVIC

- Pulse Salir en el mando a distancia
- Con el botón Menu puede acceder al menú de

- Puede entrar al Menú Servicio con el botón azu

### 3 SALIDA DEL MODO SERVICIO

**telecomando** → - Vaya al punto QUIT del menú principal de modo Servicio → - Pulse el botón «<»,«OK» o «>» → - Modo TV.

**Panel de control TV** → - Vaya al punto QUIT del menú principal de modo Servicio → - Pulse el botón«VOL.+» → - Modo TV.

*Los valores o ajustes no se guardan modo servicio y no se escriben en el*

# MODO SERVICIO (E)

## ...O SERVICIO

### 1 ACCESO AL MODO SERVICIO

Acceso panel control TV

- Apague la TV con el botón MARCHA:PARADA.
- Pulse los botones **PR -** y **VOL -** y sin soltarlos,pulsar la tecla MARCHA:PARADA.
- Libere los botones **PR -** y **VOL -**.

Soft-Ver. V1.00-5 000A8 : 20
Config. A1Z-DKC
Serial-No. AGD45678

▷ QUIT
TUBE
SETUP
GEOMETRY
VIDEO
ERROR

Δ UP ∇ DOWN ◁▷ SELECT

**Nota :**

*En modo servicio:*
- *Se ignora la función de bloqueo y se inicializa la función "cerradura ninos".*
- *Anula todos las horas programadas*
- *La patilla 8 del SCART es ignorada*
- *La detección WSS AV Link, EPG, y Telexto son desactivados.*
- *El apagado automático en caso de ausencia de señal de antena es desactivado.*
- *El contraste,color y brillo son puestos a los valores de fábrica.*
- *la nitidez es puesta al punto medio.*
- *La expansión de contrast al nivel bajo*
- *Modo Instalación es desactivado.*
- *Zoom y formato ignorados.*

### 2 SALIDA TEMPORAL DEL MODO SERVICIO

- Pulse Salir en el mando a distancia
- Con el botón Menu puede acceder al menú de uso cotidiano.

- Puede entrar al Menú Servicio con el botón azul.

### 3 SALIDA DEL MODO SERVICIO

| telecomando | Panel de control TV | Tecla on/off de |
|---|---|---|
| - Vaya al punto QUIT del menú principal de modo Servicio | | - Función Stand-by o desconexión (off) con tecla on/off. |
| - Pulse el botón «<»,«OK» o «>» | - Pulse el botón«VOL.+» | |

- Modo TV.

*Los valores o ajustes no se guardan antes de salir del modo servicio y no se escriben en el NVM*

## II - NAVIGATION INSIDE THE SERVICE MODE - DEPLACEMENT DANS LE MODE SERVICE SUCHE IN SERVICE MODE - OPZIONI NEL SERVICE MODE - BUSQUEDA EN MODO SERVICIO

### 1 REMOTE CONTROL - TELECOMMANDE - FERNBEDIENUNG TELECOMANDO - MANDO A DISTANCIA

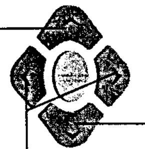

Naviagation up — Naviagation down

- Select option
- Option anwählen
- Selezionare l'opzione
- Seleccionar opción

- "Change" value ▷ → VALUE ↗
- Wert "änden"
- "Cambiare" valore ◁ → VALUE ↘
- "Cambiar" valor

### 2 TV CONTROL PANEL - CLAVIER TV - TASTATUR DES FERNSEHGERÄTS - COMANDI DEL TELEVISORE

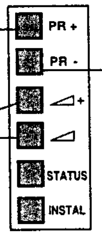

PR + / PR - / ◁+ / ◁ / STATUS / INSTAL

Naviagation up — Naviagation down

- Select option
- Option anwählen
- Selezionare l'opzione
- Seleccionar opción

- "Change" value Vol. + → VALUE ↗
- Wert "änden"
- "Cambiare" valore Vol. - → VALUE ↘
- "Cambiar" valor

**Changing page - Changement de page Seitenwechsel - Cambiare Pagina - Cambio de página**

| End of page<br>Fin de page<br>Am Seitenende<br>Fine della pagina<br>Fin de página | Beginning of Page<br>Début de page<br>Am Seitenanfang<br>Inzio della pagina<br>Comienzo de página |
|---|---|
| GEOMETRY FULL SCREEN<br>Return<br>System Voltage -3B<br>H-VCO ◁▷ +1B<br>H-Delay -23<br>V-Blanking 1E<br>V-Amplitude +0A<br>V-Position 1B<br>∇<br>Δ UP ∇ DOWN ◁▷ CHANGE | GEOMETRY ZOOM<br>Δ<br>H-Blanking ◁▷ +3B<br>H-Blanking Symmetry -19<br>Default ☐<br>Store ☒<br>Restore ☐<br>Δ UP ∇ DOWN ◁▷ CHANGE |
| « ∇ »<br>Indicates a following page<br>Signifie qu'une page suit.<br>Bedeutet, daß eine Seite folgt<br>Indica una pagina seguente<br>Indica una página siguiente | « Δ »<br>Indicates a preceding page<br>Signifie qu'une page précède.<br>Bedeutet, daß eine Seite vorangeht<br>Indica una pagina precedente<br>Indica una página precedente |

- The menu turns the page when the cursor reaches the arrow.
- Amener le curseur sur la ligne repérée par« ∇ » ou « Δ » pour passer à la page qui précède ou qui suit.
- Cursor nach « ∇ »,« Δ » zum Seitenwechsel
- Il cursor su « ∇ »,« Δ » cambia pagina.
- Cursor en « ∇ » ,« Δ » cambia las páginas

### 3 DISPLAYING THE VALUE OF THE SETTING - AFFICHAGE DES VALEURS - ANZEIGE DES EINSTELLUNGSWERTS VISUALIZZAZIONE DEL VALORE DELLA REGOLAZIONE VISUALIZACION DEL VALOR DE AJUSTE

H-Position ◁▷ + 0E

00 to FF
Hexadecimal value
valeur hexadécimale
Einstellungswert hexadezimal
Valore esadecimale
Valor héxadecimal

bargraph

> Set value : NVM value <

Display - + > NVM value — Display - - < NVM value

### 4 TOGGLE FUNCTIONS - VALIDATION DES FONCTIONS EIN-UND AUSSCHALT FUNKTIONEN - FUNZIONI DI COMMUTAZIONE - FUNCION CONMUTACION

To enable a function check (tick) ☒ the box.
Pour valider une fonction cocher ☒ la case correspondante
Zum Implementieren einer Funktion das Kontrollkästchen ☒ aktivieren (ankreuzen)
Per implementare una funzione di verifica, (vistare) ☒ la casella
Para poner en fucionamiento una función verifique (señale) ☒ la casilla

☒ : Implemented function ☐ : No implemented function

☐ → ☒
☒ → ☐

### 5 STORING VALUES IN MEMORY - MEMORISATION DES VALEURS - SPEICHERN DER WERTE - MEMORIZZAEZ I VALORI - VALORES ALMACENADOS EN LA MEMORIA

**After setting, the values are stored in NVM.**
**Après réglages les valeurs sont mémorisées en NVM.**
**Nach dem Einstellen werden die Werte im NVM gespeichert.**
**Dopo la regolazione i valori vengono memorizzati in NVM.**
**Después del ajuste, los valores son almacenados en NVM**

The box ☐ becomes ☒
During alignment, values are temporarily stored in RAM.
En cours d'alignement les valeurs sont mémorisées temporairement en RAM
Während des Abgleichs werden die Werte vorübergehend im RAM gespeichert
Durante l'allineamento i valori vengono memorizzati provvisoriamente sulla RAM
Durante el alineamento, los valores son almacenados temporalmente en RAM

| | |
|---|---|
| **Store** | Copies RAM values into NVM<br>Copie la valeur RAM en NVM<br>Kopieren des Werts von RAM nach NVM<br>Copiare i valori RAM in NVM<br>Copiar valores RAM en NVM |
| **Restore** | Copies all values from NVM into RAM.<br>Copie toutes les valeurs des données NVM en RAM<br>Kopiert alle NVM-Datenwerte in den RAM<br>Copiare tutti i valori da NVM sulla RAM<br>Copia todos los valores de NVM a RAM |
| **ROM Default** | All the default values of a page in use are stored in RAM.<br>L'ensemble des valeurs par défaut d'une page courante est chargé en RAM.<br>Sämtliche Standardwerte der aktuellen Seite werden im RAM geladen<br>Tutti i valori di default di una pagina in uso vengono memorizzati sulla RAM<br>Todos los valores por defecto de la página en curso están almacenados en RAM. |

## III - LITE-MENU FOR FIELD SERVICE MODE - MENUS DU MODE SERVICE

### 1 MAIN MENU - MENU PRINCIPAL

*Software Version / Version software / Software Version / Versione software / Versión software*

*Counter / Compteur / Zähler / Contador / Contatore*

*Receiver composition / Composition du Récepteur / Aufbau des Empfängers / Composizione del ricevitore / Composición del Receptor*

*Serial Number / N° de série / Serien-Nr. / Numero seriale / N° Serie*

*Alignment / Alignement / Abgleich / Regolazione / Alineacion*

Soft-Ver. V1.00-5 000A8 : 20
Config. A1Z-DKC
Serial-No. AGD45678

▷ QUIT
TUBE
SETUP
GEOMETRY
VIDEO
ERROR

Δ UP ∇ DOWN ◁▷ SELECT

*Navigation inside the Service Mode*
*Navigation dans le Service Mode*
*Suche im Service Mode*
*Opzioni del Service Mode*
*Búsqueda en el Modo Servicio*

**TV CONFIGURATION - CONFIGURATION DU TV - GERÄTEKONFIGURATION - CONFIGURAZIONE DEL TV - CONFIGURACIÓN Y TV**

| Config. | A1Z-DKC |
|---|---|

Character 1 : Tube type : «A»= 4/3 , «W» =16/9
Character 2 : Chassis type : «5» = 50Hz, «1»= 100 Hz
Character 3 : Zoom available : «Z»=yes, «-»=not
Character 4 : Ambiant Sensor : «S»= detected, «-»= not
Character 5 : Dolby : «D»=detected, «-»= not
Character 6 : AV Link detected : «K»=IR link detected, «-»= not
Character 7 : Password mode: «C»= Password stored, «-»= not

**TIME COUNTER - COMPTEUR DE TEMPS - ZÄHLER - CONTATORE - CONTADOR**

*The counter indicates the TV's number of service hours.It counts from to 0 to 65535 hours. The display is hexadecimal.*

*Le compteur de temps indique le nombre d'heures de service du TV. Il compte de 0 à 65535 heures. L'affichage est en hexadécimal.*

*Der Zähler zeigt an, wieviele Stunden der Fernseher in Betrieb ist. Die Anzeige ist hexadezimal.*

*Il contatore indica il numero di ore di servizio del TV. Puo' contatore da 0 a 65535. La visualizzazione è esadecimale.*

*El contador indica el número de horas de servicio de la TV. Cuenta de 0 a 65535 horas. El visualizador es hexadecimal.*

### 2 SUBMENU - SOUS-MENU

*Change the page / Changement de page / Seitenwechsel / cambio di pagina / cambio de página*

VIDEO PAL
Δ
Scal.Brightness -1A
Scal. Colour +24
Scal. Contrast -1F
Text Setup Mode ▷
Default ☑
Store ☑
Restore ☑
Δ UP ∇ DOWN ◁▷ CHANGE

*Hexadecimal value / Valeur hexadecimale de reglage / Abgleichwerte hexadezimal / Valore di regolazione esadecimale / Valor del ajuste en hexadecimal*

*Bargraph / Bargraphe de réglage / Bargraph / Barre grafica di regolazione / Barra gráfica del ajuste*

*Enable a function / Case de validation - Fonction validée si "cochée" / Zum Implementieren einer Funktion / Per inserire la Funzione / Activar una función*

*Navigation inside the Service Mode / Navigation dans le Service Mode / Suche im Service Mode / Opzioni del Service Mode*

# ALIGNMENT PROCEDURE - PROCESSUS DE REGLAGES - ABGLEICH - VISUALIZZAZIONE DEL VALORE DELLA REGOLAZIONE - PROCEDIMIENTO DE ALINEACION

**TUBE**
Return
Tube type A66ECY...
Store ◁▷ ☑
Restore ☐
Δ UP ∇ DOWN ◁▷ SELECT

**SETUP**
Return
OSD Position -20
PIN Erase ◁▷ ☑
Clear Prog. ☑
Standard Pan-Euro ...
WSS ☑
∇
Δ UP ∇ DOWN ◁▷ CHANGE

*page 1*

**SETUP**
Δ
Text Lang. 1
Ext.HIFI/Dolby Ext. ☑
IR Download ▷
Default ☐
Store ☑
Restore ☐
Δ UP ∇ DOWN ◁▷ CHANGE

*page 2*

**GEOMETRY** FULL SCREEN
Return
System Voltage -3B
H-VCO ◁▷+1B
H-Delay -23
V-Blanking 1E
V-Amplitude +0A
V-Position 1B
∇
Δ UP ∇ DOWN ◁▷ CHANGE

*page 1*

*Test Bar pattern used : 4/3 with geometric circle.*

**GEOMETRY** ZOOM1
Δ
V-Linearity -3B
H-Position ◁▷+0E
H-Amplitude -19
EW-Amplitude +1C
EW-Trapezium 2B
EW-Shape 1D
∇
Δ UP ∇ DOWN ◁▷ CHANGE

*page 2*

*Adjust separate for 4/3 and 16/9 format. See annexed*

**VIDEO** PAL
Return
Normalise User Settings ☑
G2 Alignment mode ▷
R-Cut off +1B
G-Cut off -1F
R-Drive +3A
G-Drive -3B
B-Drive
Peak-White
∇
Δ UP ∇ DOWN ◁▷ CHANGE

*page 1*

**VIDEO** PAL
Δ
Scal.Brightness -1A
Scal. Colour +24
Scal. Contrast -1F
Text Setup Mode ▷
Default ☑
Store ☑
Restore ☑
UP ∇ DOWN ◁▷ CHANGE

*page 2*

*Color standard or RGB is autodetected and displayed opposite the displayed opposite the menu title.*

## TUBE

**Return**
Closes the submenu and the main Field Service Mode menu appears.

Retourne au menu principal.

Verlassen des Untermenüs

Chiude il sottomenu e fa apparire il menu principale Field Service Mode.

Cierra el submenú. El menú Field Service Mode aparece.

Press </>: remote control; Vol. +/- : TV keyb.

**Tube type**

Define the right tube after changing the NVM.
6 characters
New type tube values ( with default video and geometry ) are immediatly active
Variable geometry and video parameters are put into NVM when the Store feature is selected. See below tube list.

Definit le tube exact après changement de NVM.
Les nouvelles valeurs de tubes (avec video et géometrie) sont actives de suite.
Les paramètres de vidéo et de géométrie sont chargés en NVM lorsque STORE est sélectionné. Voir liste ci-dessous.

Den Bildröhrentyp auswählen.
Die Geometrie-und Videodefault Werte werden sofort in das NVM geladen.
Bildrohrauflistung : siehe unten.

Definire il tubo appropriato dopo aver cambiato il NVM; 6 caratteri I valori per il nuovo tipo di tubo (con video e forma di default) sono immediatamente attivi. I parametri per video e forma variabili vengono immess i nel NVM quando viene selezionata la funzione Store. Si veda la lista dei tubi riportata sotto.

Definir el tubo correcto después de haber cambiado el NVM.6 caracteres.Los nuevos valores de tipo de tubo (con la vídeo y la geometría por defecto) se activan inmediatamente. Los parámetros variables de geometría y vídeo se graban en el NVM al seleccionar la función Store. Vea más arriba la lista de tubos.

Default tube type :

100Hz A66EGW 48X322 : A66EGW
4/3 28"MP, invar, vector gun, BSVM

→ After setting → Store (+) ☑

| TUBE NAME | LIST | DESCRIPTION | tube type |
|---|---|---|---|
| A66EGW 48X322 | A66EGW | 4/3 28" MP, invar,vector gun, BSVM | 10,100Hz |
| A59EGD048X322 | A59EGD | 4/3 25" SF,invar,vector gun, BSVM | 11,100Hz |
| A68EGD038X322 | A68EGD | 4/3 29" SF, invar,vector gun, BSVM | 12,100Hz |
| A68EES038X322 | A68EES | 4/3 29" SF , invar, COTY MDF gun, BSVM | 12,100Hz |
| W66EGV023X122 | W66EGV | 16/9 28" SF , invar , vector gun , BSVM | 13,100Hz |
| W76EGV023X122 | W76EGV | 16/9 32"SF, invar , vector gun, BSVM | 14,100Hz |
| W76EGX023X122 | W76EGX | 16/9 32"SF, invar , COTY MDF gun , BSVM | 14,100Hz |

## SETUP

**Return**
Closes the submenu and the main Field Service Mode menu appears.
Retourne au menu principal.

Verlassen des Untermenüs

Chiude il sottomenu e fa apparire il menu principale Field Service Mode.

Cierra el submenú. El menú Field Service Mode aparece.
Press </>: remote control; Vol. +/- : TV keyb.

**OSD Position**
Adjusts the position of all Megatext OSD.
Horizontale zentrierung des OSD.

**PIN Erase** Erases all PINs.
☑ PIN active-Pin aktiv
☐ No PIN active-Kein PIN
Selection : Long press: ≈ 5s
Press </>/OK: remote control;Vol. +/- :TV keyb.
Löschen des PIN Code durch längeres (≈ 5s) drücken der Taste >oder<.
Automatically stored

**Clear Prog.**
Clears all programms stored in the memory.
Analogues values SOUND PICTURE : factory values.
Return the TV to "out of factory mode.
Selection : Long press:2,5s

Efface tous les programmes mémorisés.
valeurs SON et IMAGES: valeurs usines.
Pour sortir des valeurs usine :
Selection : Long press:2,5s

Setzt das Gerät in die Werksgrundeinstellungen.
Es erscheint nach dem erneuten.
Einschalten das Installationsmenü.

Clear Prog.
Cancella tutti i programmi in memoria.Valori analogici SUONO IMMAGINE:valori di fabbrica.
Riportare la TV al modo Selezione: pressione prolungata: 2,5 sec.

Programa de borrado.
Borra todos los programas almacenados en la memoria.Valores análogos de SOUND PICTURE: valores de fábrica.Regreso a la TV para "salir del modo fábrica".Selección: Presión larga igual a 2,5 s.

☑ active-aktiv ☐ No active-inaktiv

**Standard** "Pan-Euro" or "I".
BG PAL SECAM,L SECAM (France),
DKK' SECAM,NTSC M,I PAL (UK/IRELAND)

**WSS** Detection "auto-surround" and "format" via Teletext line 23.
Selection of WSS Processing is valid for all programs.

Sélection du process WSS valid pour tous programmes

WSS (nur bei 16:9 oder Dolby)
Auswertung der Zeile 23 zur automatishen Format-umschaltung und Dolby-umschaltung

Rivelazione "auto-surround" e "format" via televideo alla riga 23.La selezione di WSS Processing vale per tutti programmi.
La selezione di WSS Processing vale per tutti programmi.

Detección "auto-surround" y "format" a través de la línea 23 de Teletext.La selección del procesamiento WSS es válida para todos los programas.La selección del procesamiento WSS es válida para todos los programas.

☑ detect.enable- aktiv ☐ disable-inaktiv

## SETUP

**Text. Lang.** Teletext language :

| 0 | 1 | 2 | 3 |
|---|---|---|---|
| English | Polish | English(US) | English |
| German | German | German | German |
| Swedish | Swedish | Swedish | Swedish |
| Italian | Italian | Italian | Italian |
| French | French | French | French |
| Portug. | Serbocroat | Portug. | Portug. |
| Czech/Slov. | Czech/Slov. | Czech/Slov. | Turkish. |
| - | Rumanian | English(UK). | - |

**EXT.HIFI / Dolby Ext.**

Dolby Internal Not available on Normal Sound TV's
Nur bei Dolby TV.
☑ Dolby with External Loudspeaker.
Dolby mit ext.Lautsprechern
☐ Dolby with Internal Loudspeakers.
Dolby mit int. Lautsprechern

External HIFI Not available on Dolby TV's
Bei nicht Dolby TV
☑ External HIFI control
Einstellung der Lautstärke int.Lautsprecher
☐ Normal sound control
Einstellung der Lautstärke der Cinchbuchsen (HIFI Anlage)

**IR Download**

Download screen for receiving mapping via IR data.

Ecran de chargement pour réception "mapping" via IR data

Herunterladen des Programmschemas per IR.

Trasferimento IR
Trasferire schermo per ricezione mappatura via dati IR

Descarga de IR
Pantalla de descarga para recibir el mapeado a través de los datos IR.

IR Download
Programme 00
Return / Abort ◁
IR Download active

"programme 00" : function is active or finished.
Return / Abort : To exit/Abort the menu press "left" arrow key or Volume - key of keyboard.

All other IR commands have no response.

Toutes les autres commandes IR sont sans réponse;

Es gibt auf IR Kommandos keine Reaktion.

Tutti gli altri comandi IR sono senza risposta

Los otros comandos IR no envían respuesta.

→ After setting → Store (+) ☑

## GEOMETRY

**Return**
Closes the submenu and the main Field Service Mode menu appears.
Retourne au menu principal.

Verlassen des Untermenüs

Chiude il sottomenu e fa apparire il menu principale Field Service Mode.

Cierra el submenú. El menú Field Service Mode aparece.
Press </>: remote control; Vol. +/- : TV keyb.

**System Voltage**
Adjustment of the system voltage Usys.
Only possible via the local keyboard Vol +/- .
Einstellung nur über die Bordbedienung möglich (Lautstärke +/-)

| TUBE NAME | DESCRIPTION | Usys |
|---|---|---|
| A66EGW 48X322 | 4/3 28" MP | 134V +/- 0.5V |
| A59EGD048X322 | 4/3 25"SF | 137V +/-0.5V |
| A68EGD038X322 | 4/3 29" SF | 137V +/-0.5V |
| A68EES038X322 | 4/3 29" SF | 137V +/- 0.5V |
| W66EGV023X122 | 16/9 28" SF | 134V +/- 0.5V |
| W76EGV023X122 | 16/9 32"SF | 134V +/-0.5V |
| W66EGV023X122 | 16/9 32"SF | 134V +/- 0.5V |

**H-VCO** Horizontal - VCO oscillator.

Adjust H_VCO until the speed of the unsynchronised picture gets the slowest.

Agir sur H-VCO pour obtenir une image la plus proche de la synchronisation

Den H-VCO auf Schwebung einstellen.

Regolare l'H_VCO finché l'immagine non sincronizzata non avrà raggiunto la velocità minima.

Ajuste H_VCO hasta que la imagen no sincronizada alcance su velocidad más baja.
default value = 0FH
Press </>: remote control; Vol. +/- : TV keyb.

**H-Delay** — Horizontal delay. Use "+" and "-" to adapt the image

**V-Blanking**
1-V-amp. pre-align: > 7% overscan
2- Reduce V-blanking: visible on top & bottom
3-Increase step/step:blank. at the bottom and cut- off lines at the top disappear
4- Increase one more step
5- Fine adjust V-amp. and V-position

1-V-amp. ampl.vertic. suffisante (>7% overscan)
2- réduire V-blanking:visible en haut et bas.
3-Agir étape par étape jusqu'à disparition du blanking en bas d'image et des lignes de cut-off en haut d'écran
4- Augmenter d'une valeur.
5- Faire un réglage fin de V-amp. et V-position

1-V-Position und V-Amplitude optimal einstellen ( V-amp. vorabgleich: >7% Überschreibung.)
2- V-Blank soweit verändern, daß am oberen und unterern Bildrand gerade eine Austastung sichtbar wird.
3-Den Wert von-Blank um 2 steps erhöhen (2 x die + Taste drücken).

1- Ampiezza verticale: grande a sufficienza (7% di sovrascanzioni)
2- Riduzione della soppressione verticale: visibile in alto e in basso
3- Aumentare passo/passo: vuoto in basso per veder scomparire le linee di interdizione in alto
4- Aumentare ancora di un passo
5- Regolare con precisione l'ampiezza e la posizione verticali

1- Amplitud V: suficientemente grande (7% de sobreexploración)
2- Reducir el parpadeo V: visible en las partes superior e inferior.
3- Aumentar el paso a paso: el vacío en la parte inferior y las líneas de corte en la parte superior desaparecen.
4- Aumentar de otro paso.
5- Ajustar finamente la amplitud V y la posición V.

**V-Amplitude**
**V-Position**

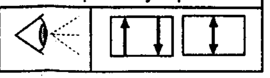

→ After setting → Store (+) ☑

## GEOMETRY

V-Linearity
H-Position
H-Amplitude
EW - Amplitude
EW - Trapezium
EW -Shape

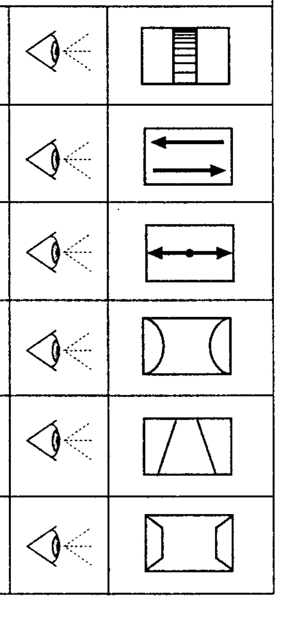

**GEOMETRY** ZOOM0
Δ
Default ☐
Store ☑
Restore ☐
Δ UP ∇ DOWN ◁▷ CHANGE

*page 3*

→ After setting → Store (+) ☑

## VIDEO PAL

**Return**
Closes the submenu and the main Field Service Mode menu appears.
Retourne au menu principal.

Verlassen des Untermenüs

Chiude il sottomenu e fa apparire il menu principale Field Service Mode.

Cierra el submenú. El menú Field Service Mode aparece.

Press </>: remote control; Vol. +/- : TV keyb.

**Normalise User Settings**

Recalls the factory settings for colour, brightness, contrast and sharpness and sets contrast expand to "low".

☑ Factory settings recalled
☐ User settings kept.

**G2 Alignment**
Display a special menu:
Adjust R-Cut off and G-Cut off to 80H temporary.

RGB cutoff counters

Adjust the lowest value with SCREEN potentiometer to: see table
Es erscheint folgendes Menu. Die R-und G-Cut off Werte für diese Einstellung temporär auf 80H einstellen. den kleinsten angezeigten Wert mit dem Schrmgitterensteller auf entsprechenden. wert in der Tabelle abgleichen.

| Tube Type | Value | Tube Type | Value |
|---|---|---|---|
| A66EGW | 60H | W76EGX | 60H |
| A59EGD | 50H | A80EDM | 60H |
| A68EGD | 50H | A90AFF | 50H |
| W66EGV | 50H | RP 4 / 3 | - |
| W76EGV | 60H | RP 16 / 9 | 60H |

To return video submenu:
Press </>/OK: remote control;Vol. +/- :TV keyb.
Select"Restore" to restore the cut off values.

**R-Cut off***
**G-Cut off***
☼ + ◑ + ◐ =nom.
Grey scale test pattern white =100%
(grey)

**R - Drive**
**G - Drive**
**B - Drive**
☼ + ◑ + ◐ =nom.
Grey scale test pattern white =100%
(white)

**Peak-White****

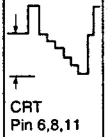


☼ + ◐ + ◑ =nom.
Peek white test pattern white =100%

| Tube Type | [init] | [Vpp] | Tube Type | [init] | [Vpp] |
|---|---|---|---|---|---|
| A59EGD | 470 | 110 | A90AFF | | |
| A66ECY | 350 | 110 | W66EGV | 550 | 110 |
| A66EGW | 425 | 110 | W76EGV | 430 | 110 |
| A68EGD | 400 | 110 | W76EGX | 430 | 110 |
| A80EDM | | | | | |

(Blue cathode ↓ — Blue cathode ↓)

## VIDEO PAL

**Scal. Brightness**
☼ + ◑ = 50%
◐ = 100%
Grey scale test pattern white =100%
(black)

**Scal*. Colour**
☼ + ◑ + ◐ =nom.
PAL (then SECAM +RGB)
75% Colour bar test pattern via RF.

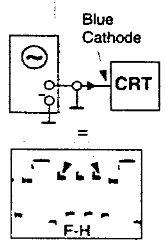


**Scal. Contrast**
factory settings.

**Text Set-up Mode**
☼ + ◑ + ◐ =nom.
Set Text Contr. to max. !
Adjust Text Gain to get a light output of just ≥40% of OMA peak withe.
Fine-adjust with Text Contr. to 40% of light output of OMA Peak White.

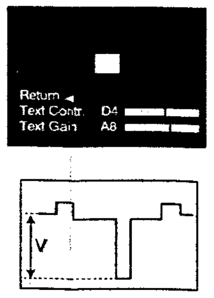


CRT Pin 6,8,11

**Note :**
* adjust separate for PAL/NTSC/SECAM and RGB/AV
getrennte Einstellung für PAL/SEACAM und RGB/AV
* * After PEAK white adjustment control cut off setting.
Repeat the adjustments if necessary.
nach der Einstellung von Peak white die Cut off Einstellungen wiederholen

→ After setting → Store (+) ☑

| VIDEO | | PAL |
|---|---|---|
| Δ | | |
| Scal.Brightness | -1A | |
| Scal. Colour | +24 | |
| Scal. Contrast | -1F | |
| Text Setup Mode ▷ | | |
| Default | | ☑ |
| Store | | ☑ |
| Restore | | ☑ |
| UP | ∇ DOWN | ◁ ▷ CHANGE |

| ERROR CODE | |
|---|---|
| Return | |
| Erase Error Codes ◁ ▷ ☑ | |
| CODE | |
| 11 | 013AF |
| 24 | 008A0 |
| 78 | 0042A |
| 11 | 0023F |
| 51 | 000E3 |
| UP ∇ DOWN | ◁ ▷ CHANGE |

*page 2*

*l displayed opposite the displayed opposite the menu title.*

| VIDEO | | PAL |
|---|---|---|
| **Scal. Brightness** | 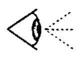 | ☼ + ◑ = 50%<br>◐ = 100%<br>Grey scale test pattern white =100%<br> <br>black |
| **Scal*. Colour** | ☼ + ◑ + ◐ =nom.<br>PAL (then SECAM +RGB)<br>75% Colour bar test pattern via RF.<br>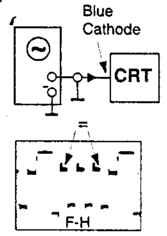 | |
| **Scal. Contrast** | factory settings. | |
| **Text Set-up Mode** | ☼ + ◑ + ◐ =nom.<br>Set Text Contr. to max. !<br>Adjust Text Gain to get a light output of just ≥40% of OMA peak withe.<br>Fine-adjust with Text Contr. to 40% of light output of OMA Peak White.<br>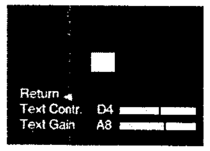<br>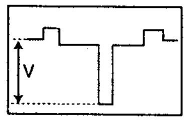<br>CRT Pin 6,8,11 | |







**Note :**

- * adjust separate for PAL/NTSC/SECAM and RGB/AV
  getrennte Einstellung für PAL/SEACAM und RGB/AV
- * * After PEAK white adjustment control cut off setting. Repeat the adjustments if necessary.
  nach der Einstellung von Peak white die Cut off Einstellungen wiederholen

**⟶ After setting** ⟶ **Store (+) ☑**

## ERROR CODE

**Return**

Closes the submenu and the main Field Service Mode menu appears.

Retourne au menu principal.

Verlassen des Untermenüs

Chiude il sottomenu e fa apparire il menu principale Field Service Mode.

Cierra el submenú. El menú Field Service Mode aparece.

Press </>: remote control; Vol. +/- : TV keyb.

**Erase Error Codes** Clears all error codes storedin the NVM.Long press action (2.5s) :

Durch längeres Drücken der >oder< Taste werden die Error Codes gelöscht.

Press </>/OK: remote control;Vol. +/- :TV keyb.

**CODE** LED Error Codes

Store the last five different error codes when each occured (via runtime counter) .The more recent error is displayed on top.A repeat of the error code on the top of the list just updates the runtime. 27 different error codes are signalled from the TV LED :11 to 44.
The error code is signalled as two separate digits with a suitable pause in-between and will repeat until the TV is fixed or fixes itself.

e.g. Error-code : 23 will be displayed :
2 flashes, short pause
3 flashes, long pause .........
List of Errors Codes : see table

Mémorise les cinq derniers codes erreurs et affiche en haut d'écran les plus récents.
27 codes erreurs différents sont signalés par 2 digits selon une séquence spécifique
Exemple :
Code erreur : 23 affiché
2 flashes, courte pause
3 flashes : longue pause
........
Voir ci-contre la liste des codes erreurs

Zeigt die letzen 5 Fehlercodes mit der Laufzeit an. Der zuletzt aufgetretene Fehler steht an erster Stelle.
Sollte ein Fehler wiederholt auftreten wird nur die Laufzeit aktualisiert.
Die Fehlercodes können im Menü Error Code angezeigt werden oder über die Kontroll LED angezeigt werden;

Beispiel für die Anzeige über die Kontroll LED :

Fehlercode 23
Zweimaliges Blinken der LED, kurze Pause
Dreimaliges Blinken der LED, lange Pause.
Auflistung der Fehlercodes : siehe Liste

Memorizzare gli ultimi cinque codici d'errore (differenti tra loro) dopoche ognuno di essi si sarà presentato (attraverso il contatore della durata di esecuzione). L'errore più recente viene visualizzato in cima. La ripetizione del codice di errore in cima alla lista non farà altro che aggiornare la durata di esecuzione.Dal LED della TV vengono segnalati 27 codici d'errore differenti, numerati da 11a 44. Il codice d'errore è indicato da due cifre separate da un opportuno intervallo di tempo e verrà ripetuto fino a quando il televisore non sarà stato riparato o non si sarà corretto da solo. Ad es:
Il codice d'errore 23 visualizzerà:
2 segnali luminosi con pausa breve
3 segnali luminosi con pausa lunga
Per la lista dei Codici d'Errore, si veda la tabella

Almacene los últimos cinco códigos de error cuando cada uno ocurre (gracias al contador de tiempo de ejecución). El error más reciente se visualiza en la parte superior. Una repetición del código de error en la parte superior de la lista solamente actualiza el tiempo de ejecución El indicador TV LED indica 27 códigos de error diferentes: de 11 a 44. El código de error se señala en forma de dos dígitos separados con una pausa apropiada entre los dos y se repetirá hasta que repare el TV o él se repara a sí mismo
Por ejemplo,Se va visualizar el código de error 23:
2 parpadeos, una pausa corta;
3 parpadeos, una pausa larga.
Para la Lista de códigos de error, consulte la tabla.

## ERROR CODES

### GB

11 1st Audio_MSP doesn't answer
12 2nd Audio-MSP doesn't answer
13 Audio-DSP doesn't answer
14 Video IC STV2161/2 doesn't answer
15 Chroma IC 2151/9143 doesn't answer
16 Upconverter DMU0 doesn't answer
17 Audio ( or Dolby) module not detected
18 SCART IC TEA6415C doesn't answer
19 Tuner CTT5000 doesn't answer
21 I2C Bus1 data line held low
22 I2C Bus2 data line held low
23 I2C Bus1 clock line held low
24 I2C Bus2 clock line held low
25 Switched 5V not available
26 Tube doesn't gets warm in time
27 Deflection detects >3 times protection (problem detected on "breathing" line)
29 DRAM memory of Megatext defect
33 The PSI chip (STV2165) doesn't answer
34 The NVM (X24C32) chip doesnt answer
35 13V not available
37 Unexpected level on NMI (Interrupt) line found (possible cause : tube flashover)
38 M3LBus for Megatext is blocked
39 Megatext (SDA5273) doesn't answer
41 bus1 (data line) not recoverable
42 bus2 (data line) not recoverable
43 MCU (Motion Mastering Up-Converter) doesn't answer
44 Convergence IC (Rear Projector ) doesn't answer

### F

11 Processeur Audio MSP ne répond plu
12 Deuxième MSP ne répond plus (Dolt
13 Audio-DSP ne répond plus (produit D
14 Video-IC STV2161 ou 2162 ne répor
15 Chroma-IC STV2151 ou TDA9143 ne d plus
16 Convertisseur de frequence d'image DMU0 (Intelligent Mastering) ne répond plus
17 Module son (ou Dolby) n'est pas déte
18 Commutateur SCART TEA6415C ne d plus
19 Tuner CTT5000 ne répond plus
21 I2C-bus 1 data bloqué au niveau bas
22 I2C-bus 1 clock bloqué au niveau ba
23 I2C-bus 2 data bloqué au niveau bas
24 I2C-bus 2 clock bloqué au niveau ba
25 Le "5V commuté" n'est pas disponibl
26 Tube ne chauffe pas a temps
27 Plus que 3-fois la déflection a détecte "protection" (c'est-a-dire qu'il y a un pe détecté sur la ligne "breathing")
29 Mémoire (DRAM) du Megatext est ep
33 STV 2165 (PSI 100Hz) ne répond plu
34 NVM (mémoire) X24C32 ne répond p
35 +13V n'est pas disponible
37 Problème détecté sur la ligne "Intern dant le démarrage ou le fonctionnement Possibilité: "arking"?
38 Bus M3L pour Megatext est bloqué
39 Megatext (SDA5273) ne répond plus
41 I2C-bus 1 data reste blocqué
42 I2C-bus 2 data reste blocqué
43 MCU (convertisseur de frequence d'idigital: Motion Mastering) ne répond plus
44 CI Convergence ne répond plus (rétrcteur)

### D

11 Audio MSP Prozessor antwortet nicht.
12 Zweiter Audio MSP Prozessor antwortet nicht.(Dolby)
13 Audio DSP Prozessor antwortet nicht. (Dolby)
14 IC STV2161/62 antwortet nicht
15 IC STV2151 / TDA9143 antwortet nicht
16 DMU0 Upconverter (Videomodul) antwortet nicht
17 Audio- oder Dolby-modul nicht erkannt
18 TEA6415C antwortet nicht (SCART Schalter)
19 Tuner CTT5000 antwortet nicht
21 I2C Bus1 data line ist auf low
22 I2C Bus2 data line ist auf low
23 I2C Bus1 clock line ist auf low
24 I2C Bus2 clock line ist auf low
25 Geschaltete 5V nicht vorhanden
26 Röhre wird nicht rechtzeitig warm
27 Ablenkung meldet 3 mal Fehler. (Problem auf Breathing Leitung)
29 DRAM des Megatext defekt
33 STV 2165 (PSI 100Hz) antwortet nicht
34 NVM Chip antwortet nicht (X24C32)
35 +13V nicht vorhanden
37 Unerwarteten Zustand an NMI (Interrupt) line gefunden. (Mögliche Urasache = Röhren Überschlag")
38 M3L Bus des Megatext blockiert
39 Megatext (SDA 5273) antwortet nicht
41 Bus1 (data line) nicht möglich zu reaktivieren
42 Bus2 (data line) nicht möglich zu reaktivieren
43 MCU (Motion Mastering Up-Converter) antwortet nicht
44 Konvergenz IC antwortet nicht (Rear-Projektor)

### I

11 Primo Audio MSP non risponde piú
12 Secondo Audio MSP non risponde p
13 Audio DSP non risponde piú
14 2161/2 non risponde piú
15 2151/9143 non risponde piú
16 Il convertitore non risponde piú
17 Modulo Audio non trovato
18 TEA6415C non risponde piú
19 Il sintonizzatore non risponde piú
21 Linea I2C bus dati 1 mantenuta bas
22 Linea I2C bus dati 2 mantenuta bas
23 Linea I2C bus temporizzatore 1 man bassa
24 Linea I2C bus temporizzatore 2 man bassa
25 Commutazione 5V non disponible
26 Il tubo non si riscalda in tempo
27 La deflezion ha rilevato piú
29 Difetto alla DRAM di Megatext
33 Il chip PSI non risponde piú
34 Il chip NVM non risponde piú
35 13V non dispcnible
37 Livello imprevisto sulla linea NMI
38 Bus M3L per Megatext bloccato
39 Megatext non risponde piú
41 Bus 1 (linea dati) non ripristinabile
42 Bus 2 (linea dati) non ripristinabile
43 MCU non risponde
44 Convergenza IC non risponde

### E

11 Procesador de audio MSP no responde
12 Segundo MSP no responde (Dolby)
13 Audio DSP no responde
14 Cir. integrado de video STV2161 ó 2162 no responde
15 Cir. integrado croma ST2151 ó TDA9143 no responde
16 Convertidor de frecuencia de imagen digital DMU0 (Mastering Inteligente) no responde
17 Módulo de sonido (o Dolby) no se detecta
18 Conmutador Scart (TEA6415C) no responde
19 Tuner CTT5000 no responde
21 Data 1 del bus I2C permanece en bajo
22 Clock 1 del bus I2C permanece en bajo
23 Data 2 del bus I2C permanece en bajo
24 Clock 2 del bus I2C permanece en bajo
25 No se dispone de los "5v conmutados"
26 El tubo tarda en calentarse
27 La protección de la deflexión actúa mas de 3 veces (el problema se detecta en la línea de "breathing")
29 La memoria DRAM del Megatext está defectuosa
33 El chip STV2161 (PSI 100Hz) nonde
34 La memoria no volátil X24C32 nonde
35 No están disponibles los + 13 v.
37 Problema detectado en la línea "ipt" durante el arranque o el funcionao del TV.Posibilidad de chispazos y alta?
38 El bus M3L para el Megatext estueado
39 Megatext (SDA5273) no respond
41 Data 1 del bus I2C permanece bido
42 Data 2 del bus I2C permanece bado
43 MCU (convertidor de frecuencia agen digital: Motion Mastering) no res
44 Cir. integrado de covergencia nonde (retroproyectores)



# GEOMETRY MODE ALIGNMENT - 100Hz VERSION

## 4/3 picture tube

Signal : 4/3 test pattern

| | | |
|---|---|---|
| **4 / 3 standard mode zoom 0** | 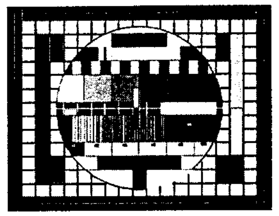 | **100Hz Version** : overscan V=107% , H=107%<br>1- Adjust Vertical position and Vertical amplitude<br>2- Adjust Vertical Blanking and linearity<br> <br>3- Adjust Horizontal position and Horizontal ampltude<br>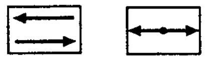<br>4-Adjust EW Amplitude ,EW Shape and Trapezium<br> |
| **<4/3> zoom 1** | 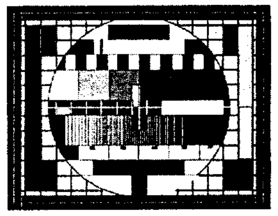 | **100 Hz Version** : overscan V=120% , H=120%<br>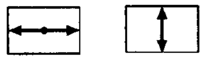 |
| **16 / 9 standard mode zoom 0** | 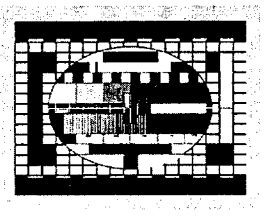 | Adjust the vertical height until V = 80%<br>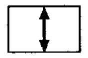 |
| **<16 / 9> zoom 1** | 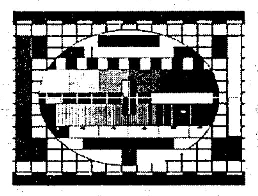 | Adjust the vertical height : V =90%<br>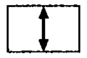 |

## 16/9 picture tube

Signal : 4/3 test pattern

| | | |
|---|---|---|
| **16 / 9 standard mode zoom 0** | 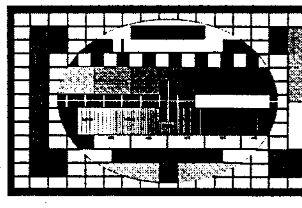 | **100Hz Version** : overscan V=107%, H =107%<br>1- Adjust Vertical position and Vertical amplitude<br>2- Adjust Vertical Blanking and linearity<br>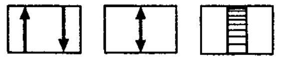<br>3- Adjust Horizontal position and Horizontal ampltude<br>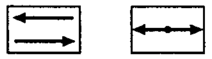<br>4-Adjust EW Amplitude ,EW Shape and Trapezium<br> |

## MAIN BOARD - PLATINE PRINCIPALE - CHASSIS GRUNDPLATTE - PIASTRA PRINCIPALE - PLATINA PRINCIPAL

COMPONENT SIDE - COTE COMPOSANTS - BESTÜCKUNGSSEITE - LATO COMPONENTI - LADO COMPONENTES

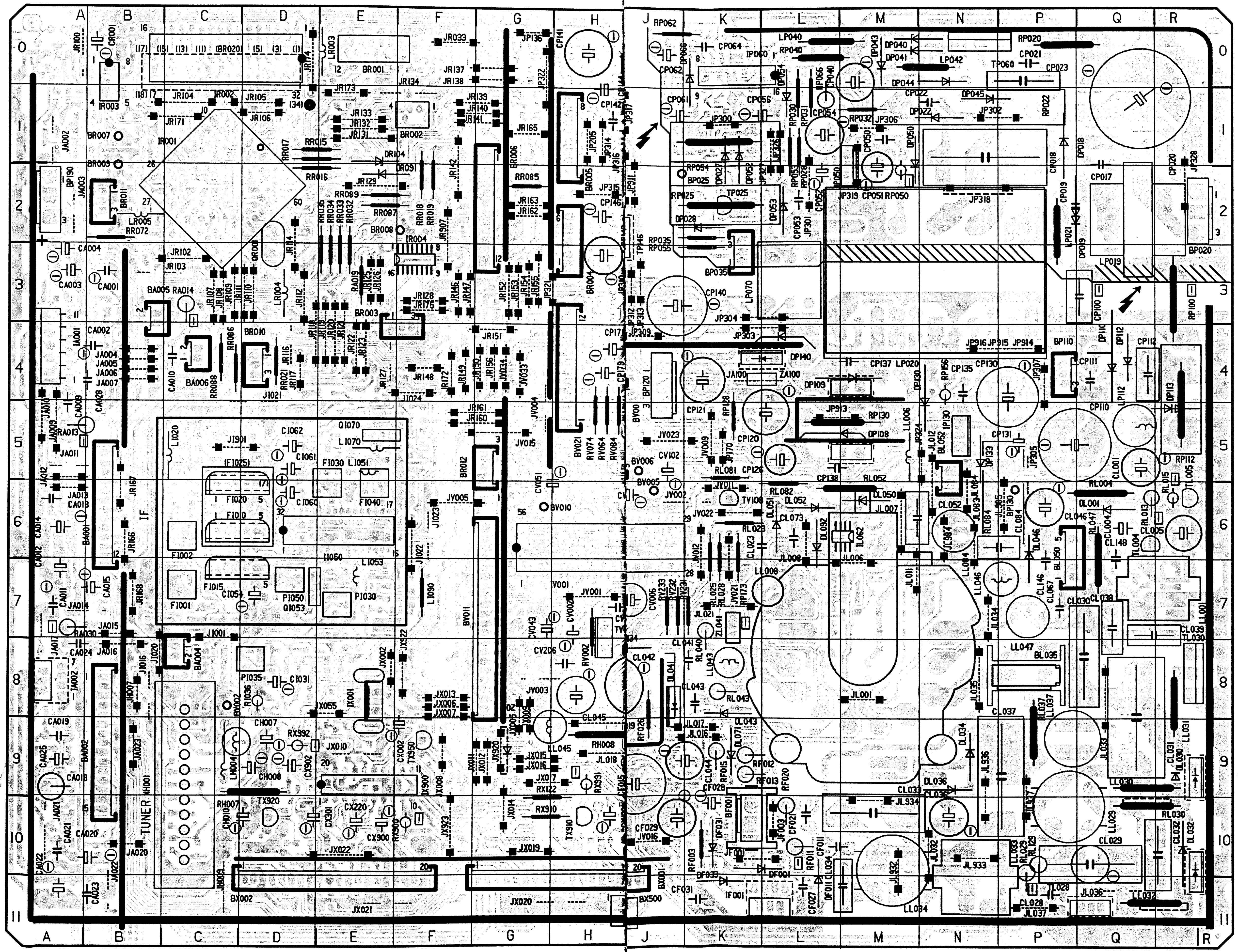

SOLDER SIDE

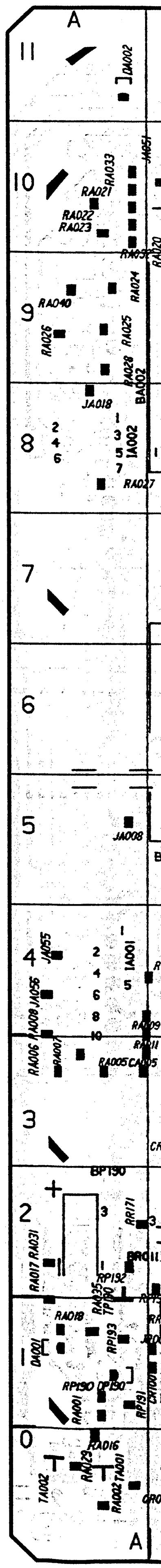

## SOLDER SIDE - CÔTE SOUDURES - LÖTSEITE - LATO SALDATURE - LADO SOLDADURAS

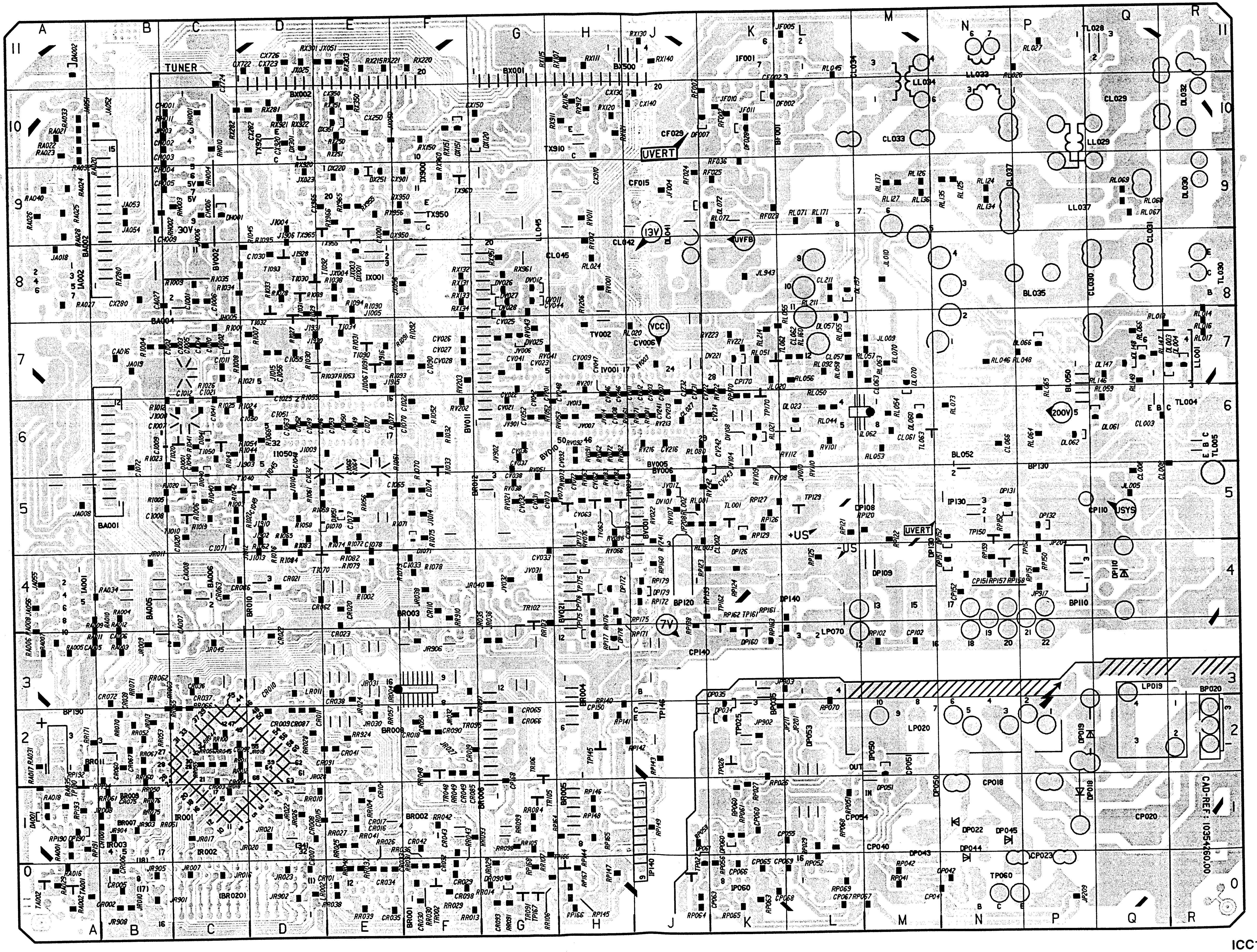




ICC19 100 Hz
First issue 09 / 97

# COMPONENTS LOCATION - LOCALISATION DES ELEMENTS - LAGE DER BAUTEILE - LOCALIZZAZIONE DEGLI ELEMENTI - LOCALIZACION DE LOS COMPONENTES

* SOLDER SIDE - COTE CUIVRE - LÖTSEITE - LATO SALDATURE - LADO DEL COBRE

| 1 | 2 | 3 |
|---|---|---|

| | |
|---|---|
| BA001 | B6 |
| BA002 | B9 |
| BA004 | C8 |
| BA005 | B3 |
| BA006 | C4 |
| BF001 | K10 |
| BL035 | P8 |
| BL050 | P6 |
| BL052 | N5 |
| BP020 | R2 |
| BP025 | J2 |
| BP035 | K3 |
| BP110 | P4 |
| BP120 | J4 |
| BP130 | P6 |
| BP190 | A2 |
| BR001 | E0 |
| BR002 | F1 |
| BR003 | F4 |
| BR004 | H2 |
| BR005 | H1 |
| BR006 | G2 |
| BR007 | B1 |
| BR008 | F2 |
| BR009 | B2 |
| BR010 | D4 |
| BR011 | B2 |
| BR012 | G5 |
| BV001 | J5 |
| BV002 | C8 |
| BV005 | J6 |
| BV006 | J5 |
| BV010 | G6 |
| BV011 | G7 |
| BV021 | H4 |
| BX001 | H11 |
| BX002 | E11 |
| BX500 | J11 |

| | |
|---|---|
| CA001 | B3 |
| CA002 | B4 |
| CA003 | A3 |
| CA004 | A3 |
| CA005* | B3 |
| CA006* | B3 |
| CA007* | C3 |
| CA008* | C4 |
| CA009 | A5 |
| CA010 | C4 |
| CA011 | A7 |
| CA012 | A7 |
| CA013 | A6 |
| CA014 | A6 |
| CA015 | B7 |
| CA016* | B7 |
| CA018 | A9 |
| CA019 | A9 |
| CA020 | B10 |
| CA021 | A10 |
| CA022 | A11 |
| CA023 | B11 |
| CA024 | A8 |
| CA025 | A9 |
| CA027* | C8 |
| CA028 | B4 |
| CF002* | K10 |
| CF011 | L10 |
| CF015 | J9 |
| CF021 | L10 |
| CF027 | L11 |
| CF028 | K10 |
| CF029 | J10 |
| CF031 | K11 |
| CH001* | C10 |
| CH002* | C10 |
| CH003* | C10 |
| CH004* | C9 |
| CH005* | C9 |
| CH006* | C9 |
| CH007 | D9 |
| CH008 | D9 |
| CH009* | B9 |
| CH010 | D10 |
| CI001* | C8 |
| CI002* | B7 |
| CI003* | C7 |
| CI004* | C7 |
| CI005* | C7 |
| CI006* | C8 |
| CI007* | B6 |
| CI008* | C5 |
| CI009* | C6 |
| CI010* | C7 |
| CI011* | C7 |
| CI012* | C6 |
| CI020* | C5 |
| CI021* | C6 |
| CI022* | F6 |
| CI025* | D7 |
| CI030* | D8 |

| | |
|---|---|
| CI031 | D8 |
| CI032* | E5 |
| CI033* | F4 |
| CI040* | C6 |
| CI041* | C6 |
| CI045* | D5 |
| CI046* | E6 |
| CI048* | D6 |
| CI049* | D6 |
| CI050* | D6 |
| CI051* | D6 |
| CI052* | D6 |
| CI053* | E6 |
| CI054 | D7 |
| CI055* | D7 |
| CI056* | D7 |
| CI060 | D6 |
| CI061 | D5 |
| CI062 | D5 |
| CI063* | D6 |
| CI064* | E5 |
| CI065* | E5 |
| CI066* | E5 |
| CI070* | F6 |
| CI071* | C5 |
| CI072* | B6 |
| CI073* | E5 |
| CI074* | F5 |
| CI077* | E6 |
| CI078* | E4 |
| CI090* | F7 |
| CL001 | Q5 |
| CL002* | K5 |
| CL003* | Q6 |
| CL004 | Q6 |
| CL005 | R6 |
| CL006* | Q5 |
| CL008* | R5 |
| CL023 | L6 |
| CL027* | J6 |
| CL028 | P11 |
| CL029 | Q10 |
| CL029 | Q10 |
| CL030 | Q8 |
| CL031 | Q8 |
| CL032 | R10 |
| CL033 | M10 |
| CL034 | M11 |
| CL036 | N10 |
| CL037 | P9 |
| CL038 | Q7 |
| CL039 | R7 |
| CL041 | K8 |
| CL042 | J8 |
| CL043 | K8 |
| CL044 | K9 |
| CL045 | H8 |
| CL046 | P6 |
| CL052 | M6 |
| CL057* | L7 |
| CL061* | M6 |
| CL062* | L7 |
| CL063* | M7 |
| CL066* | N6 |
| CL067 | P7 |
| CL073 | L6 |
| CL084 | P6 |
| CL146 | P6 |
| ICL148 | Q6 |
| CL211* | L8 |
| CP017 | Q1 |
| CP018 | N1 |
| CP019 | Q2 |
| CP020 | Q1 |
| CP020 | Q1 |
| CP021 | P0 |
| CP022 | N1 |
| CP023 | P0 |
| CP040 | M0 |
| CP041* | N0 |
| CP042* | N0 |
| CP050 | M1 |
| CP051 | M2 |
| CP052 | L2 |
| CP053 | L2 |
| CP054 | L1 |
| CP055* | L1 |
| CP056 | L1 |
| CP060* | K1 |
| CP061 | J1 |
| CP062 | J0 |
| CP063* | J0 |
| CP064 | K0 |
| CP065* | K0 |
| CP066* | K0 |
| CP067* | L0 |
| CP068* | K0 |
| CP069* | L0 |
| CP100 | P3 |
| CP100 | Q3 |
| CP102* | M3 |
| CP110 | P5 |
| CP111 | Q4 |
| CP112 | Q4 |
| CP120 | L5 |

| | |
|---|---|
| CP121 | K4 |
| CP126 | L5 |
| CP130 | P4 |
| CP131 | P5 |
| CP135 | N4 |
| CP137 | M4 |
| CP138 | L5 |
| CP140 | J3 |
| CP141 | H0 |
| CP142 | H1 |
| CP143 | H3 |
| CP144 | H1 |
| CP146 | H2 |
| CP150* | H2 |
| CP151* | N4 |
| CP152* | N4 |
| CP168* | G1 |
| CP170* | K6 |
| CP171 | H4 |
| CP176* | H4 |
| CP179 | H4 |
| CR001 | B0 |
| CR002* | A0 |
| CR003* | C2 |
| CR004* | C2 |
| CR005* | B0 |
| CR006* | B0 |
| CR007* | D0 |
| CR008* | D1 |
| CR009* | D2 |
| CR010* | D2 |
| CR011* | D2 |
| CR015* | D1 |
| CR016* | E1 |
| CR017* | E1 |
| CR018* | F2 |
| CR019* | F2 |
| CR020* | E4 |
| CR021* | D4 |
| CR022* | D3 |
| CR023* | E4 |
| CR029* | F0 |
| CR030* | F0 |
| CR032* | F0 |
| CR033* | E0 |
| CR034* | E0 |
| CR035* | E0 |
| CR036* | C3 |
| CR037* | C3 |
| CR038* | E3 |
| CR039* | B2 |
| CR041* | E2 |
| CR042* | F1 |
| CR043* | F1 |
| CR049* | F2 |
| CR050* | F2 |
| CR060* | B2 |
| CR062* | D4 |
| CR063* | C4 |
| CR065* | G2 |
| CR066* | G2 |
| CR067* | B2 |
| CR072* | B3 |
| CR075* | B1 |
| CR085* | F2 |
| CR086* | C4 |
| CR087* | D2 |
| CR090* | F2 |
| CR091* | E2 |
| CR092* | C2 |
| CR093* | G0 |
| CR098* | F0 |
| CR100* | B1 |
| CR101* | E0 |
| CR104* | E1 |
| CR110* | F4 |
| CV002 | H7 |
| CV003 | J6 |
| CV006 | J7 |
| CV007* | J6 |
| CV008* | H6 |
| CV009* | H7 |
| CV011* | J6 |
| CV012* | J6 |
| CV021* | G6 |
| CV022* | G7 |
| CV023* | G7 |
| CV025* | G7 |
| CV026* | F7 |
| CV027* | F7 |
| CV028* | F7 |
| CV031* | G5 |
| CV032* | G5 |
| CV033* | G4 |
| CV036* | G6 |
| CV037* | G6 |
| CV038* | G6 |
| CV041* | G7 |
| CV042* | G6 |
| CV043 | G7 |
| CV044* | G8 |
| CV046* | H6 |
| CV047* | H6 |
| CV048* | H7 |
| CV051 | H6 |

| | |
|---|---|
| CV052* | G6 |
| CV062* | H5 |
| CV063* | H5 |
| CV072* | H5 |
| CV073* | H5 |
| CV082* | H5 |
| CV083* | H5 |
| CV092* | H6 |
| CV102 | J5 |
| CV103 | J6 |
| CV201* | H6 |
| CV206 | H8 |
| CV207 | H7 |
| CV213* | J6 |
| CV216* | J6 |
| CV222* | K6 |
| CV231* | J6 |
| CV232* | J6 |
| CV234* | K6 |
| CV241* | J6 |
| CV242* | K6 |
| CV243* | K5 |
| CV246* | H6 |
| CX001* | E9 |
| CX002 | F9 |
| CX120 | H10 |
| CX130* | J10 |
| CX140* | J10 |
| CX150* | G10 |
| CX220 | E10 |
| CX250* | E10 |
| CX280* | B8 |
| CX282* | D10 |
| CX301 | D10 |
| CX350* | E10 |
| CX722* | D11 |
| CX723* | D11 |
| CX724* | C11 |
| CX726* | D11 |
| CX900 | E10 |
| CX901* | F9 |
| CX902 | D9 |
| CX910* | H10 |
| CX920* | D10 |
| CX950* | F9 |
| CX965* | E9 |

| | |
|---|---|
| DA001* | A1 |
| DA002* | A11 |
| DF001 | K10 |
| DF002* | K10 |
| DF007* | K10 |
| DF011 | L11 |
| DF028* | K10 |
| DF031 | K10 |
| DF033 | K11 |
| DH001* | C9 |
| DI001* | C5 |
| DI002* | C7 |
| DI040* | C6 |
| DI041* | C6 |
| DI051* | E5 |
| DI070* | E5 |
| DI071* | F5 |
| DL001 | Q6 |
| DL003* | R7 |
| DL004* | R7 |
| DL023* | L6 |
| DL030* | R9 |
| DL030 | R9 |
| DL032* | R10 |
| DL032 | R10 |
| DL032 | R11 |
| DL034 | N9 |
| DL036 | N9 |
| DL041* | J8 |
| DL041 | J8 |
| DL043 | K8 |
| DL046 | P6 |
| DL050 | M6 |
| DL051 | L6 |
| IDL052 | L6 |
| DL057* | L7 |
| DL060* | M6 |
| DL061* | Q6 |
| DL062* | P6 |
| DL066* | P7 |
| DL070* | M7 |
| DL071 | K9 |
| DL072* | K9 |
| DL092 | L6 |
| DL147* | Q7 |
| DL148* | Q7 |
| DL157* | L8 |
| DP018 | P1 |
| DP019 | Q2 |
| DP022 | N1 |
| DP027 | K1 |
| DP028 | K2 |
| DP034* | K2 |
| DP035 | K2 |
| DP040 | N0 |
| DP041 | N0 |

| | |
|---|---|
| DP043 | M0 |
| DP044 | N0 |
| DP045 | N1 |
| DP050 | M1 |
| DP051* | M2 |
| DP052 | K1 |
| DP053 | L2 |
| DP054 | L1 |
| DP060* | K1 |
| DP061* | J0 |
| DP066 | K0 |
| DP108 | L5 |
| DP108* | M5 |
| DP108 | M4 |
| DP109* | M4 |
| DP109 | M4 |
| DP110 | Q4 |
| DP112 | Q4 |
| DP113 | R5 |
| DP126* | K5 |
| DP130 | N4 |
| DP131* | N5 |
| DP132* | P5 |
| DP133 | N5 |
| DP134 | J8 |
| DP140* | L4 |
| DP140 | L4 |
| DP151* | N4 |
| DP152* | N5 |
| DP160* | K3 |
| DP172* | H4 |
| DP173* | H4 |
| DP175* | H3 |
| DP178* | H3 |
| DP179* | J4 |
| DP190* | A1 |
| DR090* | G0 |
| DR091 | E2 |
| DR104 | E1 |
| DV011* | G8 |
| DV012* | G8 |
| DV025* | G7 |
| DV026* | G8 |
| DV027* | G8 |
| DV028* | G8 |
| DV101* | J5 |
| DV104* | K5 |
| DV108* | K6 |
| DV221* | K7 |
| DX001* | E8 |
| DX120 | G10 |
| DX151* | F10 |
| DX220* | E9 |
| DX251* | E9 |
| DX301* | D10 |
| DX351* | E10 |

| | |
|---|---|
| FI001 | C7 |
| FI002 | C6 |
| FI010 | C6 |
| FI015 | C7 |
| FI020 | C6 |
| FI030 | E6 |
| FI040 | E6 |

| | |
|---|---|
| IA001 | A7 |
| IA001 | A4 |
| IA001 | A8 |
| IA002 | A2 |
| IF001 | L11 |
| II050 | E6 |
| IIL062* | M6 |
| IP050 | M1 |
| IP060 | K0 |
| IP130 | N5 |
| IP140 | J2 |
| IP140 | J1 |
| IR001* | C2 |
| IR001 | C2 |
| IR002* | C0 |
| IR002 | C0 |
| IR003 | B0 |
| IR004* | F3 |
| IR004 | F3 |
| IV001 | H6 |
| IX001* | E8 |
| IX001 | E8 |
| IX900 | E9 |

| | |
|---|---|
| JA002 | A1 |
| JA003 | A2 |
| JA004 | B4 |
| JA005 | B4 |
| JA006 | B4 |
| JA007 | B4 |
| JA008 | A5 |
| JA009 | A5 |

| | |
|---|---|
| JA010 | A5 |
| JA011 | A5 |
| JA012 | A5 |
| JA013 | A6 |
| JA014 | B7 |
| JA015 | B7 |
| JA016 | B8 |
| JA017 | A7 |
| JA018* | A8 |
| JA019 | B7 |
| IJA020 | B10 |
| JA021 | A10 |
| JA022 | B11 |
| JA023 | B9 |
| JA051* | A10 |
| JA052* | B10 |
| JA053* | B9 |
| JA054* | B9 |
| JA055* | A4 |
| JA056* | A4 |
| JA100 | K4 |
| JF001 | K10 |
| JF003 | L10 |
| JF004* | J9 |
| JF005* | L11 |
| JF010* | K10 |
| JF011* | K10 |
| JH005* | C8 |
| JH006* | C8 |
| JH007 | B8 |
| JH009 | C11 |
| JH903* | C10 |
| JI001 | C7 |
| JI004* | D9 |
| JI005* | E7 |
| JI006* | E7 |
| JI008* | C6 |
| JI009* | E6 |
| JI010* | D5 |
| JI012* | C5 |
| JI013* | D5 |
| JI014* | F5 |
| JI015* | D7 |
| JI016 | B8 |
| JI020 | B8 |
| JI021 | D5 |
| JI022 | F6 |
| JI023 | F6 |
| JI024 | F4 |
| JI901 | C5 |
| JI902* | D5 |
| JI903* | D6 |
| JI906* | D8 |
| JI910* | D5 |
| JI915* | E7 |
| JI916* | E7 |
| JI928* | D8 |
| JI930* | D7 |
| JI931* | D8 |
| JL001 | M8 |
| JL005* | Q5 |
| JL006 | M7 |
| JL007 | M6 |
| JL008 | L6 |
| JL009* | M7 |
| JL010* | M8 |
| JL011 | M7 |
| JL012 | N6 |
| JL016 | K9 |
| JL017 | K9 |
| JL018 | H9 |
| JL019 | H9 |
| JL020* | K7 |
| JL021 | K7 |
| JL032 | N10 |
| JL033 | Q8 |
| JL034 | N7 |
| JL035 | N8 |
| JL036 | Q11 |
| JL037 | P11 |
| JL083 | N6 |
| JL084 | N6 |
| JL932 | M10 |
| JL933 | N10 |
| JL934 | M10 |
| JL936 | N10 |
| JL937 | P10 |
| JL943* | K8 |
| JL984 | N6 |
| JL985 | P6 |
| JP136 | G0 |
| JP170 | K5 |
| JP201* | L2 |
| JP204* | P5 |
| JP205 | H1 |
| JP208* | J5 |
| JP209* | P0 |
| JP211* | K2 |
| JP300 | K1 |
| JP301 | L2 |
| JP302 | P1 |
| JP303 | L4 |
| JP304 | L3 |
| JP305 | P5 |
| JP306 | M1 |

| | |
|---|---|
| JP307 | P4 |
| JP309 | J4 |
| JP310 | H3 |
| JP311 | J3 |
| JP312 | J3 |
| JP313 | J3 |
| JP314 | H1 |
| JP315 | H2 |
| JP316 | H1 |
| JP317 | J1 |
| JP318 | N2 |
| JP319 | M1 |
| JP321 | H3 |
| JP322 | G0 |
| JP324 | N5 |
| JP326 | L1 |
| JP327 | L1 |
| JP328 | R2 |
| JP902* | K2 |
| JP903* | L3 |
| JP910 | J2 |
| JP911 | J2 |
| JP913 | L5 |
| JP914 | P4 |
| JP915 | P4 |
| JP916 | P4 |
| JP917* | P4 |
| JR007* | C0 |
| JR008* | B1 |
| JR009* | B3 |
| JR017* | C1 |
| JR018* | C1 |
| JR019* | D2 |
| JR020* | D1 |
| JR021* | D1 |
| JR022* | D1 |
| JR023* | D0 |
| JR024* | E3 |
| JR026* | D1 |
| JR027* | F2 |
| JR028* | E2 |
| JR029* | G0 |
| JR030* | E2 |
| JR031* | E3 |
| JR032* | F2 |
| JR033 | F0 |
| JR035* | G3 |
| JR036* | G3 |
| JR038* | F4 |
| JR040* | G4 |
| JR045* | C3 |
| JR100 | A0 |
| JR102 | C3 |
| JR103 | B3 |
| JR104 | C1 |
| JR105 | D1 |
| JR106 | D1 |
| JR107 | C3 |
| JR108 | C3 |
| JR109 | C3 |
| JR110 | D3 |
| JR111 | D3 |
| JR112 | D3 |
| JR114 | D3 |
| JR116 | D4 |
| JR117 | D4 |
| JR118 | D4 |
| JR119 | E4 |
| JR120 | E4 |
| JR121 | E4 |
| JR122 | E4 |
| JR123 | E4 |
| JR125 | E3 |
| JR126 | E3 |
| JR127 | E4 |
| JR128 | F3 |
| JR129 | E2 |
| JR131 | E1 |
| JR132 | E1 |
| JR133 | E1 |
| JR134 | F1 |
| JR137 | G0 |
| JR138 | G0 |
| JR139 | G1 |
| JR140 | G1 |
| JR141 | G1 |
| JR142 | F2 |
| JR146 | F3 |
| JR147 | F3 |
| JR148 | F4 |
| JR149 | F4 |
| JR150 | G4 |
| JR151 | G4 |
| JR152 | G3 |
| JR153 | G3 |
| JR154 | G3 |
| JR155 | G3 |
| JR156 | G4 |
| JR160 | G5 |
| JR161 | G5 |
| JR162 | G2 |
| JR163 | G2 |
| JR165 | G1 |
| JR166 | B6 |
| JR167 | B6 |

| | |
|---|---|
| JR168 | B7 |
| JR171 | C1 |
| JR172 | F4 |
| JR173 | E1 |
| JR174 | D0 |
| JR175 | F3 |
| JR901* | B0 |
| JR902* | D0 |
| JR903* | B1 |
| JR904* | B1 |
| JR905* | B0 |
| JR906* | F3 |
| JR907 | F2 |
| JR908* | B0 |
| JV001 | H7 |
| JV002 | K6 |
| JV003 | G8 |
| JV004 | G5 |
| JV005 | F6 |
| JV006* | G7 |
| JV007* | H6 |
| IJV009 | K5 |
| JV010* | L5 |
| JV011 | K6 |
| JV012 | K6 |
| JV013* | H6 |
| JV014* | H6 |
| JV015 | G5 |
| JV016 | J10 |
| JV017* | J5 |
| JV021 | K6 |
| JV022 | K6 |
| JV023 | J5 |
| JV031* | G4 |
| JV032* | G4 |
| JV033 | G4 |
| JV034 | G4 |
| JV901* | G6 |
| JV902* | G6 |
| JX002 | E8 |
| JX003* | E8 |
| JX004* | E8 |
| JX006 | G8 |
| JX007 | F8 |
| JX008 | F9 |
| JX009 | G8 |
| JX010 | E9 |
| JX011 | G9 |
| JX012 | G9 |
| JX013 | F8 |
| JX014 | G10 |
| JX015 | G9 |
| JX016 | G9 |
| JX017 | G9 |
| JX019 | G10 |
| JX020 | H11 |
| JX021 | E11 |
| JX022 | E10 |
| JX023* | E9 |
| JX025* | D11 |
| JX050* | E10 |
| JX051* | E11 |
| JX055 | E8 |
| JX056 | F8 |
| JX920 | G9 |
| JX922 | F8 |
| JX923 | F10 |

| | |
|---|---|
| LH004 | C9 |
| LI020 | C5 |
| LI051 | E5 |
| LI053 | E7 |
| LI070 | E5 |
| LI090 | F7 |
| LL001 | R7 |
| LL006 | M5 |
| LL008 | M8 |
| LL029 | P10 |
| LL030 | Q9 |
| LL031 | R8 |
| LL032 | R11 |
| LL033 | N11 |
| LL034 | M10 |
| LL037 | P9 |
| LL043 | K8 |
| LL045 | H9 |
| LL046 | P7 |
| LL047 | P7 |
| LL084 | N6 |
| LP019 | Q2 |
| LP020 | N3 |
| LP021 | P2 |
| LP040 | L0 |
| LP042 | N0 |
| LP070 | L3 |
| LP112 | Q5 |
| LR002* | D0 |
| LR003 | E0 |
| LR004 | D3 |
| LR005 | B2 |
| LR011* | D3 |

| | |
|---|---|
| PI030 | E7 |
| PI035 | D8 |
| PI050 | D7 |

| | |
|---|---|
| QI053 | D7 |
| QI070 | E5 |
| QR001 | D3 |

| | |
|---|---|
| RA001* | A1 |
| RA002* | A0 |
| RA003* | B3 |
| RA004* | B4 |
| RA005* | A3 |
| RA006* | A3 |
| RA007* | A3 |
| RA008* | A4 |
| RA009* | B4 |
| RA010* | B4 |
| RA011* | B3 |
| RA012* | B4 |
| RA013 | A5 |
| RA014 | C3 |
| RA016* | A0 |
| RA017* | A1 |
| RA018* | A1 |
| RA019 | E3 |
| RA020* | A10 |
| RA021* | A10 |
| RA022* | A10 |
| RA023* | A10 |
| RA024* | A9 |
| RA025* | A9 |
| RA026* | A9 |
| RA027* | A8 |
| RA028* | A9 |
| RA029* | A0 |
| RA030 | A7 |
| RA031* | A2 |
| RA032* | A10 |
| RA033* | A10 |
| RA034* | B4 |
| RA035* | A1 |
| RA040* | A9 |
| RF002* | K10 |
| RF003 | K10 |
| RF007* | K10 |
| RF011 | L10 |
| RF012 | K9 |
| RF013 | K9 |
| RF015 | K9 |
| RF020 | L10 |
| RF023* | K9 |
| RF024* | J9 |
| RF025* | K9 |
| RF026 | J8 |
| RF036* | K9 |
| RH001* | C10 |
| RH002* | C9 |
| RH003* | C9 |
| RH004* | C9 |
| RH007 | D9 |
| RH008 | H9 |
| RH010* | C10 |
| RH011* | C10 |
| RI001* | C7 |
| RI002* | E4 |
| RI003* | C5 |
| RI004* | B7 |
| RI005* | C5 |
| RI006* | C5 |
| RI007* | D7 |
| RI008* | C7 |
| RI009* | C8 |
| RI012* | C6 |
| RI019* | C5 |
| RI020* | C5 |
| RI021* | D7 |
| RI022* | C5 |
| RI023* | C6 |
| RI024* | C6 |
| RI025* | C6 |
| RI026* | C7 |
| RI027* | D7 |
| RI028* | D8 |
| RI029* | E8 |
| RI030* | E7 |
| RI031* | E7 |
| RI032* | F6 |
| RI033* | D8 |
| RI034* | C8 |
| RI035* | D8 |
| RI036 | D8 |
| RI037* | E7 |
| RI038* | E8 |
| RI039* | E8 |
| RI040* | C5 |
| RI041* | C6 |

| | |
|---|---|
| RI042* | C5 |
| RI043* | C6 |
| RI044* | C6 |
| RI045* | D8 |
| RI049* | E6 |
| RI050* | E6 |
| RI051* | E6 |
| RI052* | F6 |
| RI053* | E7 |
| RI054* | C6 |
| RI055* | E7 |
| RI056* | E5 |
| RI058* | D5 |
| RI059* | E5 |
| RI061* | E5 |
| RI062* | D5 |
| RI065* | D5 |
| RI066* | D6 |
| RI070* | F5 |
| RI071* | F5 |
| RI072* | E5 |
| RI073* | E5 |
| RI074* | E5 |
| RI075* | F5 |
| RI076* | D5 |
| RI077* | E6 |
| RI078* | F4 |
| RI079* | E4 |
| RI082* | E5 |
| RI083* | D5 |
| RI084* | D4 |
| RI090* | E8 |
| RI091* | E7 |
| RI092* | F7 |
| RI093* | F7 |
| RI094* | E8 |
| RI095* | D8 |
| RL001* | J5 |
| RL002* | J5 |
| RL003* | J5 |
| RL004 | Q6 |
| RL004 | Q6 |
| RL013 | Q6 |
| RL014 | R7 |
| RL015 | R6 |
| RL016* | R7 |
| RL017* | R7 |
| RL018* | R7 |
| RL020* | J7 |
| RL021* | K6 |
| RL023 | K6 |
| RL024* | H8 |
| RL025 | K6 |
| RL026* | P11 |
| RL027* | P11 |
| RL028 | K6 |
| RL029 | P11 |
| RL030 | Q10 |
| RL030 | Q10 |
| RL037 | P9 |
| RL040 | K8 |
| RL043 | K8 |
| RL044* | L6 |
| RL045* | L11 |
| RL046* | N7 |
| RL047 | Q6 |
| RL048* | P7 |
| RL050* | L6 |
| RL051* | K7 |
| RL052 | M6 |
| RL053* | M6 |
| RL054* | M6 |
| RL055* | L7 |
| RL056* | L7 |
| RL057* | M7 |
| RL058* | L7 |
| RL059* | Q6 |
| RL063* | M7 |
| RL064* | P6 |
| RL065* | P6 |
| RL066* | Q7 |
| RL067* | Q9 |
| RL068* | Q9 |
| RL069* | Q9 |
| RL070* | M7 |
| RL071* | L9 |
| RL072* | K9 |
| RL073* | N6 |
| RL080* | J6 |
| RL081 | K5 |
| RL082 | L6 |
| RL084 | P6 |
| RL092* | L7 |
| RL124* | N9 |
| RL125* | N9 |
| RL126* | M9 |
| RL127* | M9 |
| RL129 | P10 |
| RL134* | N9 |
| RL135* | N9 |
| RL136* | M9 |
| RL137* | M9 |
| RL146* | Q7 |
| RL147* | Q7 |
| RL149* | Q7 |

| | |
|---|---|
| RL155* | L7 |
| RL160* | L7 |
| RL171* | L9 |
| RL211* | L8 |
| RL214* | K7 |
| RP020 | P0 |
| RP022 | N1 |
| RP025 | K2 |
| RP025 | K2 |
| RP026* | K2 |
| RP027* | K1 |
| RP028 | L1 |
| RP029* | L1 |
| RP030 | L1 |
| RP031 | L1 |
| RP032 | M1 |
| RP035 | K2 |
| RP040 | L0 |
| RP041* | M0 |
| RP042* | M0 |
| RP050 | M2 |
| RP051* | L1 |
| RP052* | L0 |
| RP053 | L1 |
| RP054 | K1 |
| RP054 | K1 |
| RP055 | K3 |
| RP056* | K0 |
| RP059* | J1 |
| RP060* | K1 |
| RP061* | K1 |
| RP062 | J0 |
| RP063* | K0 |
| RP064* | J0 |
| RP065* | K0 |
| RP066 | L1 |
| RP067* | M0 |
| RP068* | L1 |
| RP069* | L0 |
| RP070* | L2 |
| RP100 | R3 |
| RP102* | M3 |
| RP112 | R4 |
| RP112 | R5 |
| RP120* | M5 |
| RP121* | L5 |
| RP122* | M5 |
| RP123* | K4 |
| RP124* | K4 |
| RP125* | L4 |
| RP126* | K5 |
| RP127* | K5 |
| RP128 | K5 |
| RP129* | K5 |
| RP130 | L5 |
| RP138* | J3 |
| RP139* | K4 |
| RP140* | H2 |
| RP141* | H2 |
| RP142* | H2 |
| RP143* | J2 |
| RP144* | H0 |
| RP145* | H0 |
| RP146* | H1 |
| RP147* | H0 |
| RP148* | H1 |
| RP149* | J1 |
| RP150* | P4 |
| RP151* | P4 |
| RP152* | N5 |
| RP156 | N4 |
| RP157* | N4 |
| RP158* | P4 |
| RP159* | N4 |
| RP160* | J4 |
| RP161* | L4 |
| RP162* | K3 |
| RP163* | L3 |
| RP164* | H1 |
| RP165* | H1 |
| RP166* | H0 |
| RP167* | H0 |
| RP168* | G0 |
| RP170* | K6 |
| RP171* | H4 |
| RP172* | J4 |
| RP173 | K6 |
| RP175* | H4 |
| RP176* | H4 |
| RP177* | H3 |
| RP179* | J4 |
| RP190* | A1 |
| RP191* | A1 |
| RP192* | A2 |
| RP193* | A1 |
| RP194* | B2 |
| RR010* | D1 |
| RR011* | C2 |
| RR012* | C2 |
| RR013* | F0 |
| RR014* | G0 |
| RR015 | D1 |
| RR016 | D2 |
| RR017 | D1 |
| RR018 | F2 |

| | |
|---|---|
| RR019 | F2 |
| RR021 | D4 |
| RR025* | E0 |
| RR026* | E0 |
| RR027* | E1 |
| RR028* | D2 |
| RR029* | F0 |
| RR030* | F0 |
| RR031* | F0 |
| RR032 | E3 |
| RR033 | E3 |
| RR034 | E3 |
| RR035 | E3 |
| RR036* | F0 |
| RR037* | E0 |
| RR038* | E0 |
| RR039* | E0 |
| RR040* | E0 |
| RR041* | E1 |
| RR042* | F1 |
| RR043* | F0 |
| RR044* | C2 |
| RR045* | C2 |
| RR048* | F2 |
| RR049* | F2 |
| RR050* | B2 |
| RR051* | B1 |
| RR052* | B2 |
| RR053* | C2 |
| RR055* | C2 |
| RR056* | C2 |
| RR057* | E3 |
| RR060* | B2 |
| RR061* | B1 |
| RR062* | B3 |
| RR063* | B2 |
| RR065* | C2 |
| RR066* | C2 |
| RR067* | B2 |
| RR070* | B2 |
| RR071* | B3 |
| RR072 | B2 |
| RR075* | B1 |
| RR076* | B1 |
| RR084* | G1 |
| RR085 | G2 |
| RR086 | C4 |
| RR087 | E2 |
| RR088 | C4 |
| RR089 | E2 |
| RR091* | G0 |
| RR093* | F1 |
| RR097* | F3 |
| RR098* | G1 |
| RR099* | G1 |
| RR100* | C2 |
| RR103* | G4 |
| RR104* | E1 |
| RR105* | G1 |
| RR106* | G0 |
| RR107* | G1 |
| RR171* | B2 |
| RR910* | F4 |
| RR924* | E2 |
| RV001* | H8 |
| RV002 | H7 |
| RV003* | J7 |
| RV011* | H9 |
| RV012* | H8 |
| RV021* | G5 |
| RV022* | J5 |
| RV038* | G5 |
| RV041* | G7 |
| RV043* | G7 |
| RV051* | G5 |
| RV052* | G6 |
| RV053* | H6 |
| RV061* | H6 |
| RV062* | H6 |
| RV063* | H5 |
| RV064 | H5 |
| RV066* | H5 |
| RV071* | J6 |
| RV072* | H6 |
| RV073* | H5 |
| RV074 | H5 |
| RV076* | H5 |
| RV081* | J6 |
| RV082* | H6 |
| RV083* | H5 |
| RV084 | H5 |
| RV086* | H5 |
| RV091* | H6 |
| RV092* | H6 |
| RV101* | L6 |
| RV107* | J5 |
| RV108* | K6 |
| RV109* | K5 |
| RV110* | L6 |
| RV112* | K6 |
| RV201* | H7 |
| RV202* | F6 |
| RV203* | F7 |
| RV206* | H7 |
| RV213* | J6 |

| | |
|---|---|
| RV216* | J6 |
| RV221* | K7 |
| RV222* | K6 |
| RV223* | K7 |
| RV231 | K7 |
| RV232 | J7 |
| RV233 | J7 |
| RV241* | J5 |
| RV242* | J5 |
| RX107* | H11 |
| RX111* | H11 |
| RX115* | H11 |
| RX116* | H10 |
| RX120* | H10 |
| RX121* | H10 |
| RX122 | G10 |
| RX130* | J11 |
| RX131* | F8 |
| RX132* | F8 |
| RX133* | F8 |
| RX134* | F8 |
| RX140* | J11 |
| RX150* | F10 |
| RX151* | F10 |
| RX215* | E11 |
| RX220* | F11 |
| RX221* | E11 |
| RX250* | E10 |
| RX251* | E10 |
| RX280* | B8 |
| RX281* | D10 |
| RX282* | D10 |
| RX301* | E11 |
| RX303* | E11 |
| RX350* | E10 |
| RX351* | E10 |
| RX900 | F10 |
| RX910 | G10 |
| RX911* | H10 |
| RX912* | H10 |
| RX920* | D9 |
| RX921* | D10 |
| RX922* | D10 |
| RX950* | F9 |
| RX951* | G8 |
| RX955* | E9 |
| RX956* | E9 |
| RX960* | F9 |
| RX961* | G8 |
| RX965* | E9 |
| RX966* | E9 |
| RX991 | H9 |
| RX992 | D9 |

| | |
|---|---|
| TI010* | C5 |
| TI020* | C6 |
| TI030* | D8 |
| TI031* | D8 |
| TI032* | D8 |
| TI033* | F6 |
| TI034* | E8 |
| TI040* | D5 |
| TI045* | D5 |
| TI050* | C6 |
| TI070* | E4 |
| TI090* | E7 |
| TI091* | E7 |
| TI092* | D8 |
| TI093* | D8 |
| TL001* | K5 |
| TL004* | Q6 |
| TL005* | R6 |
| TL028 | Q11 |
| TL030 | R8 |
| TL030 | R9 |
| TL062* | K7 |
| TL063* | M6 |
| TP025* | K2 |
| TP026* | K2 |
| TP027* | J0 |
| TP060 | N0 |
| TP129* | L5 |
| TP145* | H2 |
| TP146 | J2 |
| TP150* | N5 |
| TP152* | N4 |
| TP161* | K3 |
| TP162* | K3 |
| TP166* | H0 |
| TP167* | G0 |
| TP170* | K6 |
| TP175* | H4 |
| TP190* | A1 |
| TR002* | F0 |
| TR048* | F2 |
| TR091* | G0 |
| TR095* | F2 |
| TR096* | G4 |
| TR105* | G1 |
| TR106* | G2 |
| TV002 | H7 |

| | |
|---|---|
| TV063* | H5 |
| TV073* | H5 |
| TV083* | H5 |
| TV108 | K6 |
| TX910 | H10 |
| TX920 | D10 |
| TX950 | F9 |
| TX955* | E9 |
| TX960* | F9 |
| TX965* | E9 |

H5
H5
H5
K6
H10
D10
F9
E9
F9
E9

# MAINS FILTER - MIS 19000

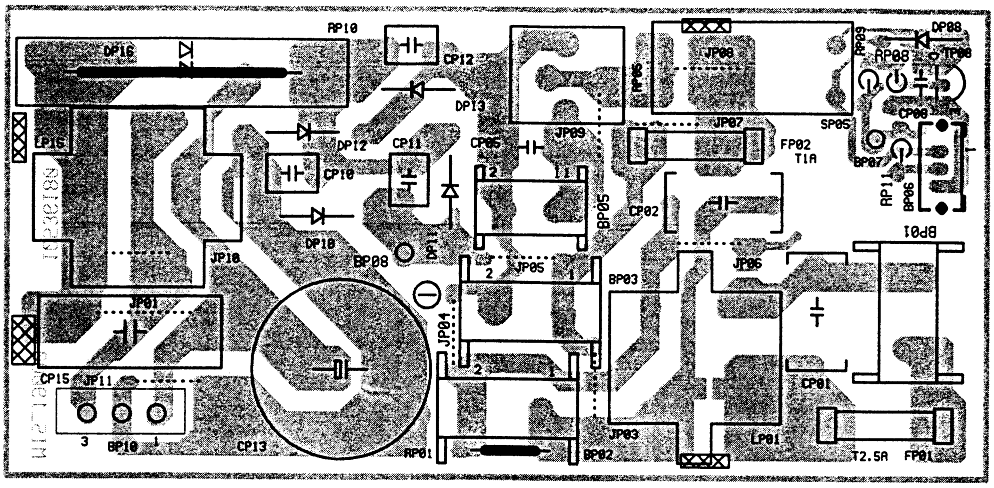


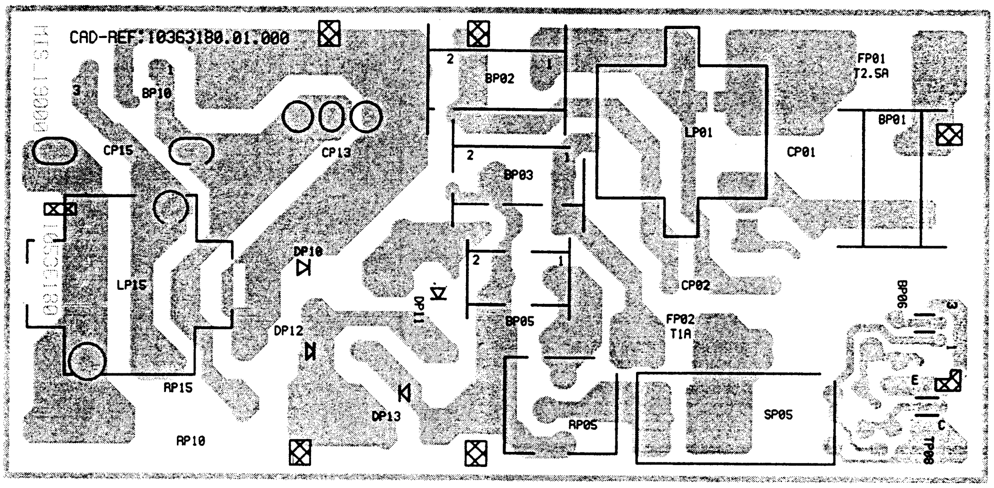


# INTEGRATED CIRCUITS AND TRANSISTORS OUTLINE - CIRCUITS INTEGRES ET TRANSISTORS
# INTEGRIERTE SCHALTUNGEN UND TRANSISTOREN - CIRCUITI INTEGRATI TRANSISTOR
# CIRCUITOS INTEGRADOS Y TRANSISTORES

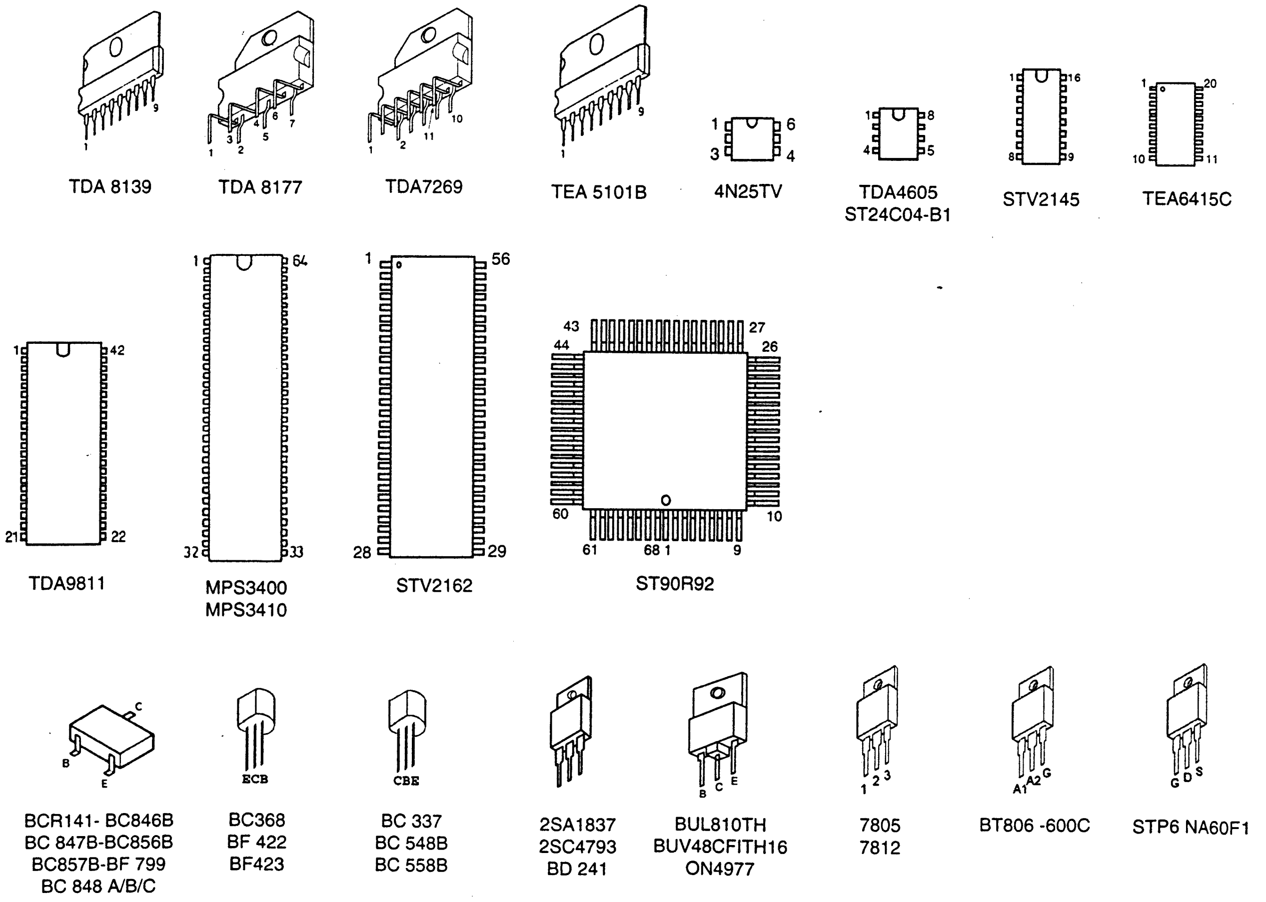

# COMPLETE PCB DIAGRAM - SCHEMA PLATINE PRINCIPALE EQUIPEE - SCHALTUNG LEITERPLA

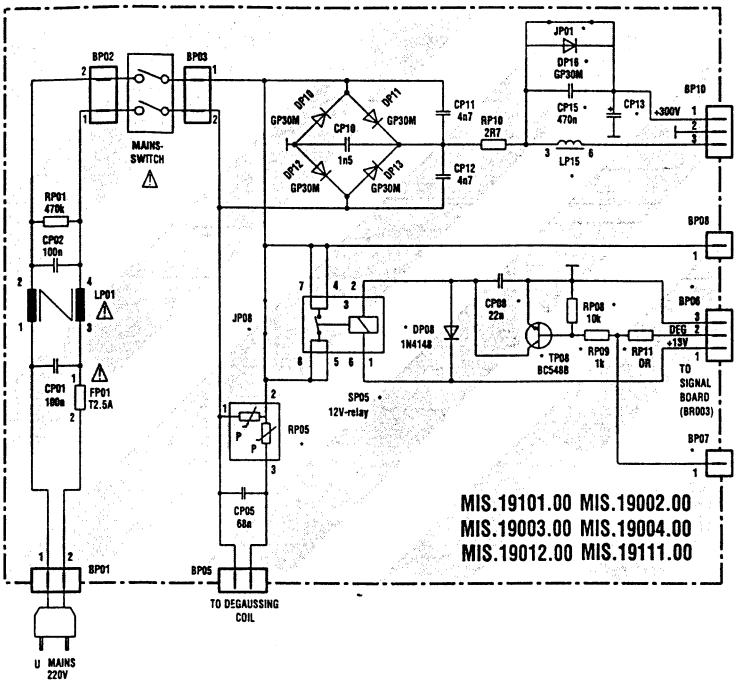


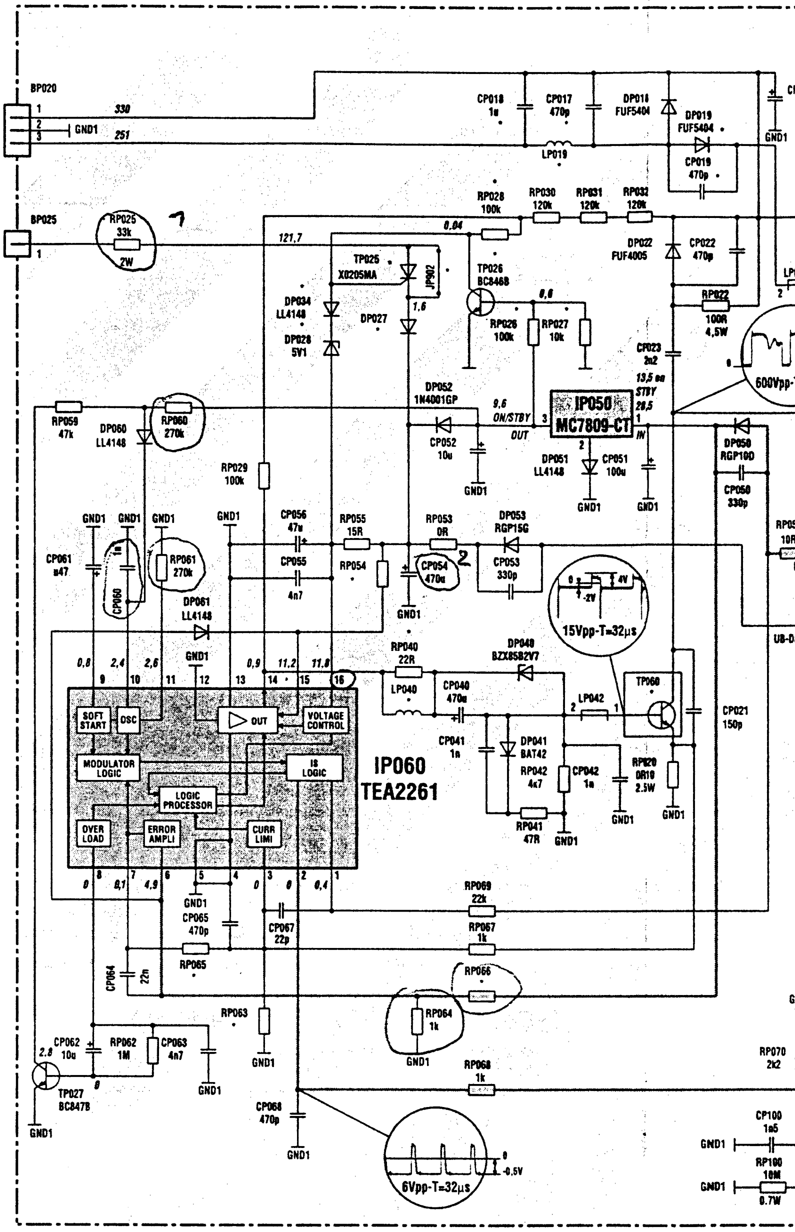


## DESIGNATON POWER
## PP.19100.00, PP.19101.00, PP.19110.00, PP.19111.00

| * | PP 19111 00 10536990 100Hz/Dolby | PP 19101 00 10393830 100Hz/Dolby | PP 19110 00 10536980 100Hz/Stereo | PP 19100 00 10353750 100Hz/Stereo |
|---|---|---|---|---|
| CP017/018/019 | - | X | - | X |
| CP020 | 150u | 150u | 150u | 150u |
| CP112 | 3n3 | 3n3 | 3n3 | 3n3 |
| CP126 | X | X | - | - |
| CP146 | X | X | X | X |
| DP019 | - | X | - | X |
| DP027 | 1N4148 | 1N4148 | 1N4148 | 1N4148 |
| DP028/034 | X | X | X | X |
| DP108/109 | BYW029-150 | BYW029-150 | RGP30D | RGP30D |
| DP110 | MUR1100E | RGP50M | RGP50M | RGP50M |
| DP113 | RGP10M | MUR1100E | MUR110E | MUR1100E |
| DP126 | X | X | - | - |
| DP140 | BYV63-50 | BYV63-150 | MR822 | MR822 |
| JP902 | - | - | - | - |
| JP910/911 | - | - | - | - |
| JP913 | - | - | X | X |
| JP914 | 139V | 139V | 139V | 139V |
| JP915 | 136V | 136V | 136V | 136V |
| JP916 | 130V | 130V | 127V | 130V |
| JP917 | 142V | 142V | 142V | 142V |
| LP019 | - | 105u | - | 105u |
| LP020 | 10397920 | 10397920 | 10397920 | 10459670 |
| LP021 | - | X | - | X |
| LP040 | 2u2 | 2u2 | 2u2 | 2u2 |
| RP026/028 | X | X | X | X |
| RP027 | X | X | X | X |
| RP040 | 1/2W | 1/2W | 1/2W | 1/2W |
| RP054 | 6R8 | 6R8 | 6R8 | 6R8 |
| RP063 | - | 47k | - | 47k |
| RP065 | 11k | 12k1 | 11k | 12k1 |
| RP066 | 4k22 | 3k57 | 4k22 | 3k57 |
| RP126/128 | X | X | - | - |
| RP127/129 | X | X | - | - |
| RP130 | X | X | - | - |
| RP138/139 | X | X | X | X |
| RP146 | X | X | X | X |
| RP157 | 130k | 130k | 130k | 130k |
| RP177 | 12k | 12k | 12k | 12k |
| TP025/026 | X | X | X | X |
| TP060 | BUL810TH | BUL810TH | BUL810TH | BUL810TH |
| TP129 | X | X | - | X |
| TP146 | X | X | X | X |
| TP162 | - |  | X | X |

X Inserted
– Not inserted

| * | different comp. | BP06 | BP07 | CP08 | CP13 | CP15 | DP08 | DP16 | JP01 | JP08 | LP15 | RP05 | RP08 | RP09 | SP05 | TP08 |
|---|---|---|---|---|---|---|---|---|---|---|---|---|---|---|---|---|
| MIS.19101 | 100Hz/+relay | X | X | X | 150u | X | X | X | — | — | 1.5mH | 18R | X | X | X | X |
| MIS.19002 | 50Hz | — | — | — | 100u | X | — | X | — | X | 3mH | 25R | — | — | — | — |
| MIS.19003 | 50Hz/+relay | X | X | X | 100u | X | X | X | — | — | 3mH | 18R | X | X | X | X |
| MIS.19004 | 50Hz/45W Pict.Pow. | — | — | — | — | X | — | X | — | X | 3mH | 25R | — | — | — | — |
| MIS.19012 | 50Hz | — | — | — | 100u | — | — | — | X | X | — | 25R | — | — | — | — |
| MIS.19111 | 100Hz/+relay | X | X | X | 150u | — | X | — | X | — | — | 18R | X | X | X | X |

X Inserted
– Not inserted

Part of board connected to mains supply.
Partie du chassis reliée au secteur.
Primärseite des Netzteils.
Parte dello châssis collegata alla rete.
Parte del chassis conectada a la red.

⚠ Use isolating mains transformer
Utilise un transformateur isolateur du secteur
Einen Trenntrafo verwenden
Utilizar un transformador aislador de red
Utilizzare un transformatore per isolarvi dalla rete

# UNG LEITERPLATTE KPL - SCHEMA PIASTRA COMPLETA - ESQUEMA PLATINA EQUIPADA

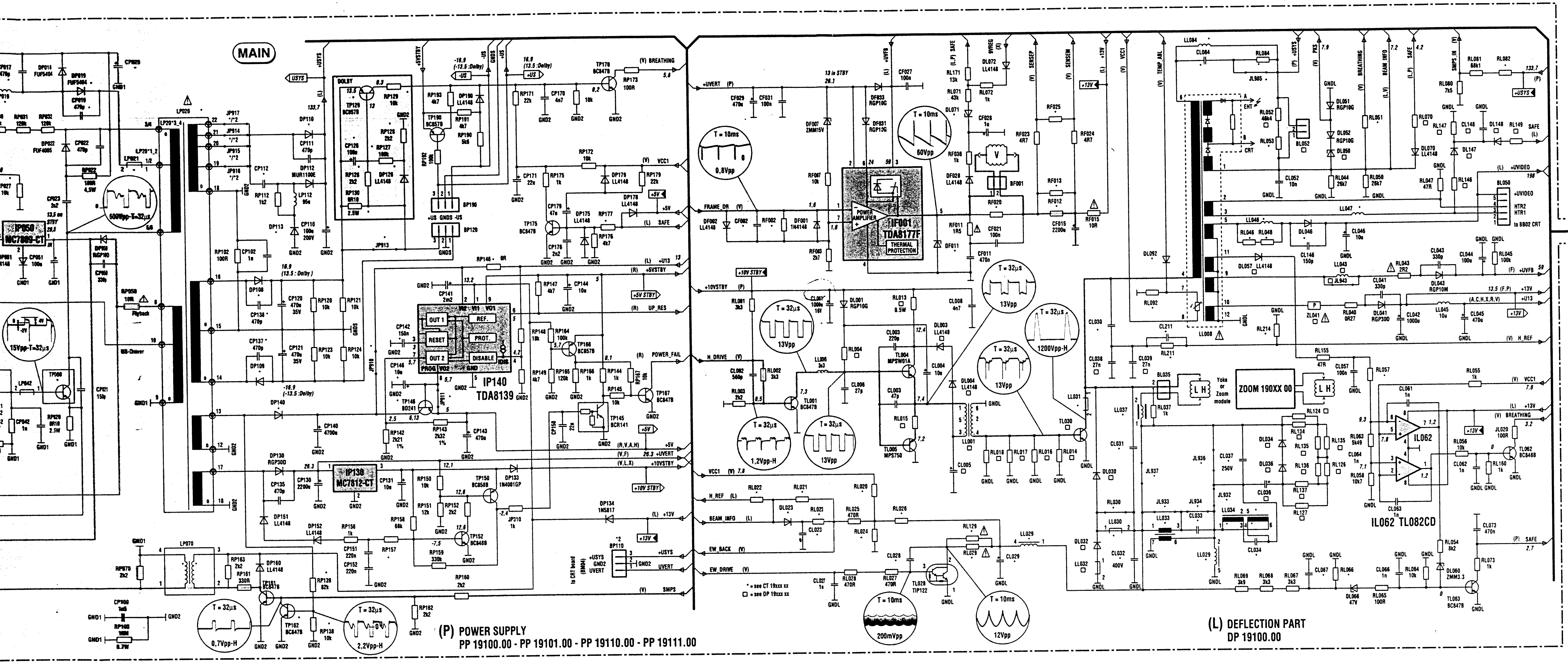


(P) POWER SUPPLY
PP 19100.00 - PP 19101.00 - PP 19110.00 - PP 19111.00

(L) DEFLECTION PART
DP 19100.00

| LP15 | RP05 | RP08 | RP09 | SP05 | TP08 |
|---|---|---|---|---|---|
| 1.5mH | 18R | X | X | X | X |
| 3mH | 25R | – | – | – | – |
| 3mH | 18R | X | X | X | X |
| 3mH | 25R | – | – | – | – |
| – | 25R | – | – | – | – |
| – | 18R | X | X | X | X |

ply.

secteur

ed
vi dalla rete

**Note :**
Power Supply primary circuit measurements.
- Use only ( GND1) connection point.

**Attention :**
Mesure dans le bloc alimentation
- Utiliser la masse du bloc alimentation ( GND1 ).

**Achtung :**
Bei Messungen im Primärnetzteil
- Primärnetzteilmasse verwenden ( GND1 ).

**Attentionze :**
misure nell'alimentatore primario
- usare massa alimentazione primario ( GND1 ).

**Cuidado :**
Medida en el bloque de alimentacion
- Utilizar la masa del bloque de alimentacion ( GND1 ).

⚠ Safety Part
When repairing, use original part only
Piece de securite
N'utilisez que les pieces d'origine
Sicherheitsbauteil
Bei Ersatz nur Originalteil verwenden
Componenti di sicurezza
durante la ripazione usare componenti originali
Pieza de seguridad
Utilice solo piezas originales

| | Deflection - Basic Partlists |
|---|---|
| □ | 100Hz |
| | DP 19100 00 |
| | 10 34 99 80 |
| BL052 | – |
| CL005 | 470u/16V |
| CL036 | 2u2/250V |
| CL038 | – |
| CL039 | 54n |
| CL148 | 220n |
| DL003/04 | – |
| DL030 | DTV32F-1500 |
| DL032 | BYT08-400 |
| DL034/036 | BYT01-200 |
| DL050 | BZX85C22 |
| DL057 | – |
| DL147/148 | LL4148 |
| JL943 | – |
| LL001 | 10 46 87 60 |
| LL030 | – |
| LL032 | 10 25 84 40 |
| LL043 | 22u |
| RF015 | PTC-15R |
| RL004 | 1k |
| RL013 | 4R7 |
| RL014 | 40R2 |
| RL015 | 1R |
| RL016/17 | 40R2 |
| RL018 | 40R2 |
| RL070 | 15k |
| RL071 | 43k |
| RL124/127 | 7k5 |
| RL134/137 | 7k5 |
| RL146 | 100R |
| RL147 | 4k7 |
| RL149 | 1k |
| TL030 | ON4977 |
| ZL041 | MP160 |

| Deflection - Picture Tube related Partlists | | | | | | |
|---|---|---|---|---|---|---|
| * | CT 19101 34 | CT 19105 37 | CT 1915237 | CT 19111 34 | CT 19112 34 | CT 19151 34 |
| | 10 36 28 80 | 10 35 15 30 | 10 52 06 10 | 10 44 48 10 | 10 47 54 60 | 10 52 06 00 |
| | 100Hz 25-28"MP 4/3 | 100Hz 29"SF 4/3 | 100Hz-MCU 29"SF 4/3 | 100Hz 28"SF 16/9 | 100Hz 32"SF 16/9 | 100Hz-MCU 32"SF 16/9 |
| CF002 | 680p | 680p | 680p | 2n2 | 2n2 | 2n2 |
| CL023 | – | – | – | – | – | – |
| CL028 | 56n | 1n | 1n | 56n | 56n | 56n |
| CL029 | 470n/63V | 3u3/63V | 3u3/63V | 470n/63V | 470n/63V | 470n/63V |
| CL030 | 1n9/2KV | 1n9/2KV | 1n9/2KV | 2n7/2KV | 2n7/2KV | 2n7/2KV |
| CL031 | 11n6/2KV | 11n6/2KV | 11n6/2KV | 11n6/2KV | 11n6/2KV | 11n6/2KV |
| CL032 | 33n/400 V | 24n/400V | 24n/400V | 33n/400V | 33n/400V | 33n/400V |
| CL033 | 560n/250V | – | – | 680n/250V | 680n/250V | 680n/250V |
| CL034 | 12n/400V | 12n/400V | 12n/400V | 12n/400V | 12n/400V | 12n/400V |
| CL037 | 680n/250V | 410n/400V | 410n/400V | 560n/250V | 560n/250V | 560n/250V |
| CL067 | 100n/100V | – | – | 100n/100V | 100n/100V | 100n/100V |
| CL084 | 3n9/400V | 3n9/400V | 3n9/400V | 3n9/400V | 3n9/400V | 3n9/400V |
| CL211 | 470p | 470p | 470p | 470p | 470p | 470p |
| DF011 | 10 36 82 10 | 10 36 82 10 | 10 36 82 10 | 10 36 82 10 | 10 36 82 10 | 10 36 82 10 |
| DL023 | – | – | – | – | – | – |
| DL046 | MUR160 | MUR160 | MUR1100E | MUR160 | MUR160 | MUR1100E |
| DL071 | BZX55C33 | BZX55C33 | BZX55C33 | BZX55C24 | BZX55C24 | BZX55C24 |
| DL092 | 1N4148 | 1N4148 | 1N4148 | 1N4148 | 1N4148 | 1N4148 |
| JL932 | – | – | – | – | – | – |
| JL933 | – | X | X | – | – | – |
| JL934 | – | X | X | – | – | – |
| JL936 | – | – | – | – | – | – |
| JL937 | – | – | – | – | – | – |
| JL985 | X | X | X | X | X | X |
| LL008 | 10 46 03 60 | 10 46 80 70 | 10 51 08 70 | 10 46 81 60 | 10 46 81 60 | 10 52 03 30 |
| LL029 | 10 34 76 50 | 10 15 42 70 | 10 15 42 70 | 10 34 76 50 | 10 34 76 50 | 10 34 76 50 |
| LL030 | – | LFBEAD 90R | LFBEAD 90R | – | – | – |
| LL031 | LFBEAD 90R | JUMPER | JUMPER | LFBEAD 90R | LFBEAD 90R | LFBEAD 90R |
| LL033 | 10 34 76 60 | – | – | 10 34 76 60 | 10 34 76 60 | 10 34 76 60 |
| LL034 | 10 15 32 70 | 10 15 32 70 | 10 15 32 70 | 10 15 32 70 | 10 15 32 70 | 10 15 32 70 |
| LL037 | 4u2 | 3u | 3u7 | 4u | 4u | 4u2 |
| LL046 | 47u | 47u | 22u | 47u | 47u | 22u |
| LL047 | 13u5 | 13u5 | 13u5 | 13u5 | 13u5 | 13u5 |
| LL084 | 29u5 | 29u5 | 29u5 | 29u5 | 29u5 | 29u5 |

| Deflection - Picture Tube related Partlists | | | | | | |
|---|---|---|---|---|---|---|
| * | CT 19101 34 | CT 19105 37 | CT 19152 37 | CT 19111 34 | CT 19112 34 | CT 19151 34 |
| | 10 36 28 80 | 10 35 15 30 | 10 52 06 10 | 10 44 48 10 | 10 47 54 60 | 10 52 06 00 |
| | 100Hz 25-28"MP 4/3 | 100Hz 29"SF 4/3 | 100Hz-MCU 29"SF 4/3 | 100Hz 28"SF 16/9 | 100Hz 32"SF 16/9 | 100Hz-MCU 32"SF 16/9 |
| RF002 | 10k | 10k | 10k | 10k | 10k | 10k |
| RF012 | 1R | 1R | 1R | 1R5 | 1R5 | 1R5 |
| RF013 | 1R | 1R | 1R | 1R82 | 1R82 | 1R82 |
| RF020 | 180R | 270R | 270R | – | – | – |
| RF025 | 39R | 43R | 43R | 150R | 150R | 150R |
| RL020 | 4k64 | 7k15 | 7k15 | 4k64 | 4k64 | 4k64 |
| RL021 | – | – | – | – | – | – |
| RL023 | – | – | – | – | – | – |
| RL024 | 2k67 | 4k02 | 4k02 | 2k67 | 2k67 | 2k67 |
| RL026 | 36k5 | 61k9 | 61k9 | 36k5 | 36k5 | 36k5 |
| RL029 | – | 2R2 | 2R2 | – | – | – |
| RL046/48 | 3k3 | 3k3 | 3k3 | 3k3 | 3k3 | 3k3 |
| RL051 | 270k | 270k | 270k | 270k | 270k | 270k |
| RL053 | 6k34 | 8k66 | 8k66 | 6k34 | 6k34 | 6k34 |
| RL057 | 26k1 | 27k4 | 56k2 | 47k5 | 47k5 | 56k2 |
| RL066 | – | 2k2 | 2k2 | – | – | – |
| RL082 | 59k | 61k9 | 61k9 | 59k | 59k | 59k |
| RL084 | – | – | – | – | – | – |
| RL092 | 4k7 | 4k7 | 4k7 | 4k7 | 4k7 | 4k7 |
| RL129 | 2R2 | – | – | 2R2 | 2R2 | 2R2 |
| RL211 | 6k8 | 6k8 | 6k8 | 6k8 | 6k8 | 6k8 |
| RL214 | – | – | – | – | – | – |
| ZOOM MODULE | – | – | – | – | – | – |

Note : the last two numbers of the CT xxxx part list name indicates the system voltage.
e.g. CT 19005 31  Usys 131V →

Nota: Los dos últimos números de la denominación CT xxxx, indica la tensión Usys
e.g. CT 19005 31  Usys 131V →

X Inserted
– Not inserted

## COMPLETE PCB DIAGRAM - SCHEMA PLATINE PRINCIPALE EQUIPEE - SCHALTUNG LEITERPLATTE KPL - SCHEMA PIASTRA COMPLETA - ESQUEMA PLATINA EQUIPADA

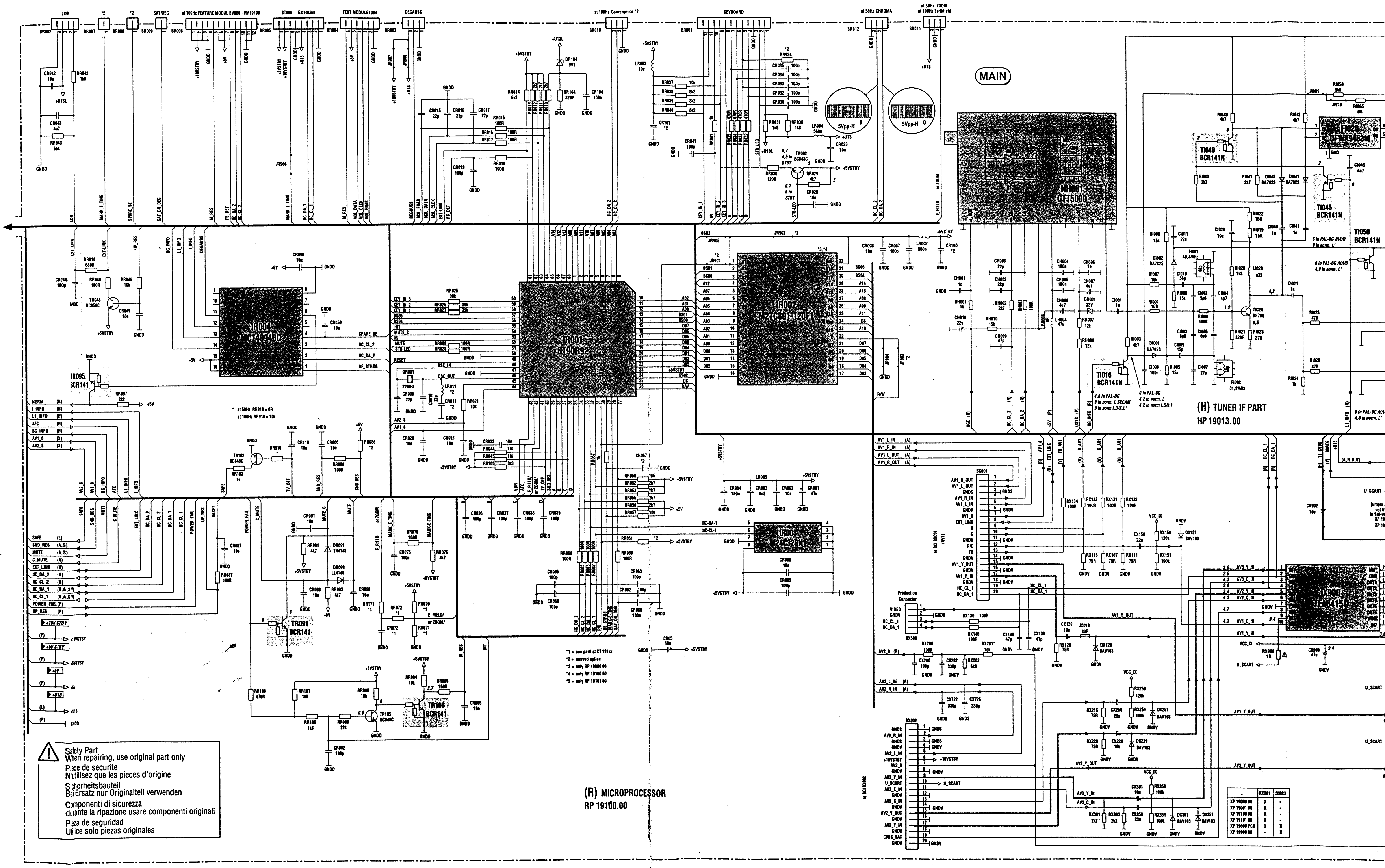


⚠ Safety Part
When repairing, use original part only
Piece de securite
N'utilisez que les pieces d'origine
Sicherheitsbauteil
Bei Ersatz nur Originalteil verwenden
Componenti di sicurezza
durante la ripazione usare componenti originali
Pieza de seguridad
Utilice solo piezas originales

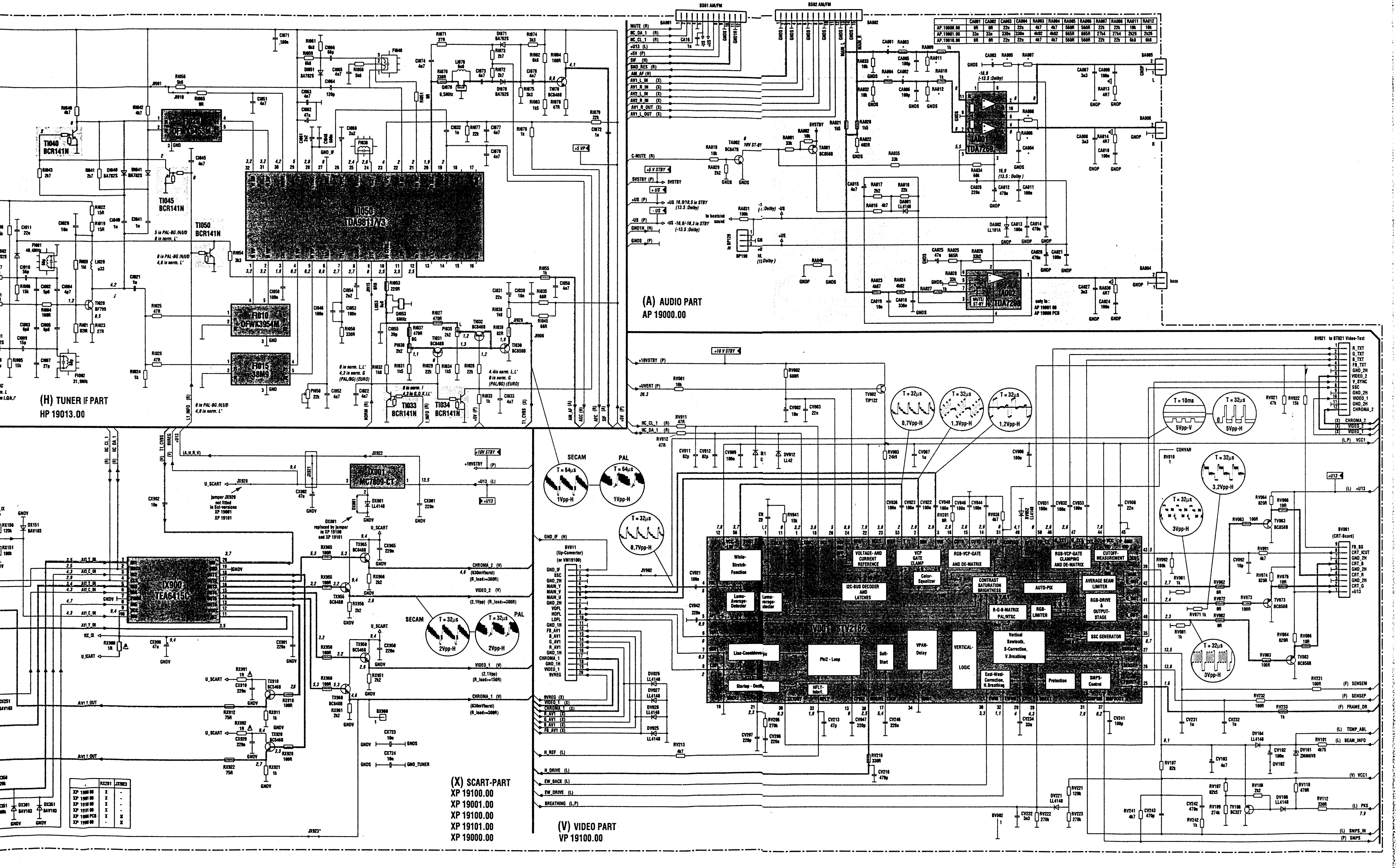
(H) TUNER IF PART
HP 19013.00
(A) AUDIO PART
AP 19000.00
(X) SCART-PART
XP 19100.00
XP 19001.00
XP 19100.00
XP 19101.00
XP 19000.00
(V) VIDEO PART
VP 19100.00
SECAM
PAL

## VM.19100.00

VM

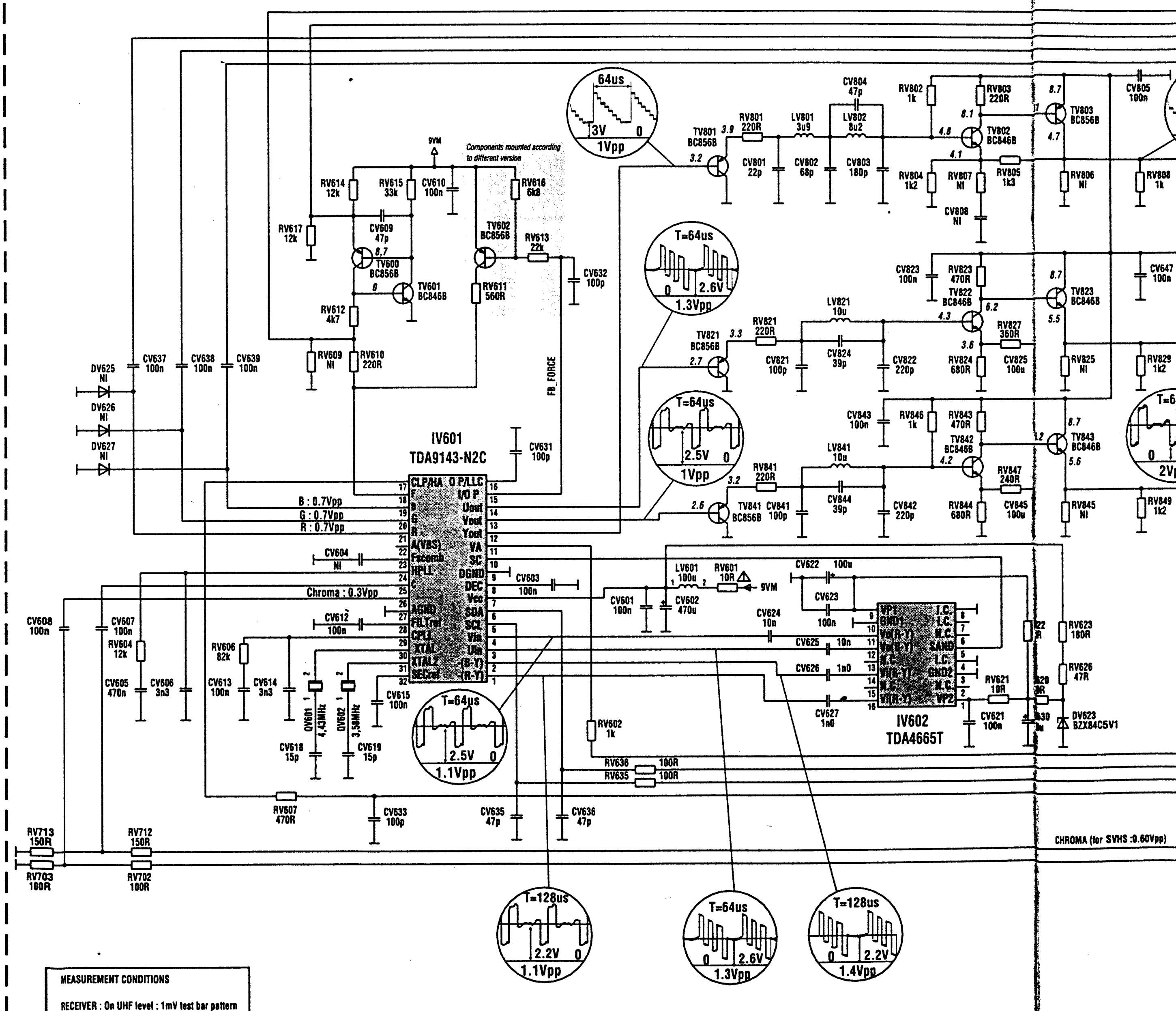


MEASUREMENT CONDITIONS

RECEIVER : On UHF level : 1mV test bar pattern
- SECAM Norm L standard, 100% white
DC voltages measured betwen the point and earth using a digital meter

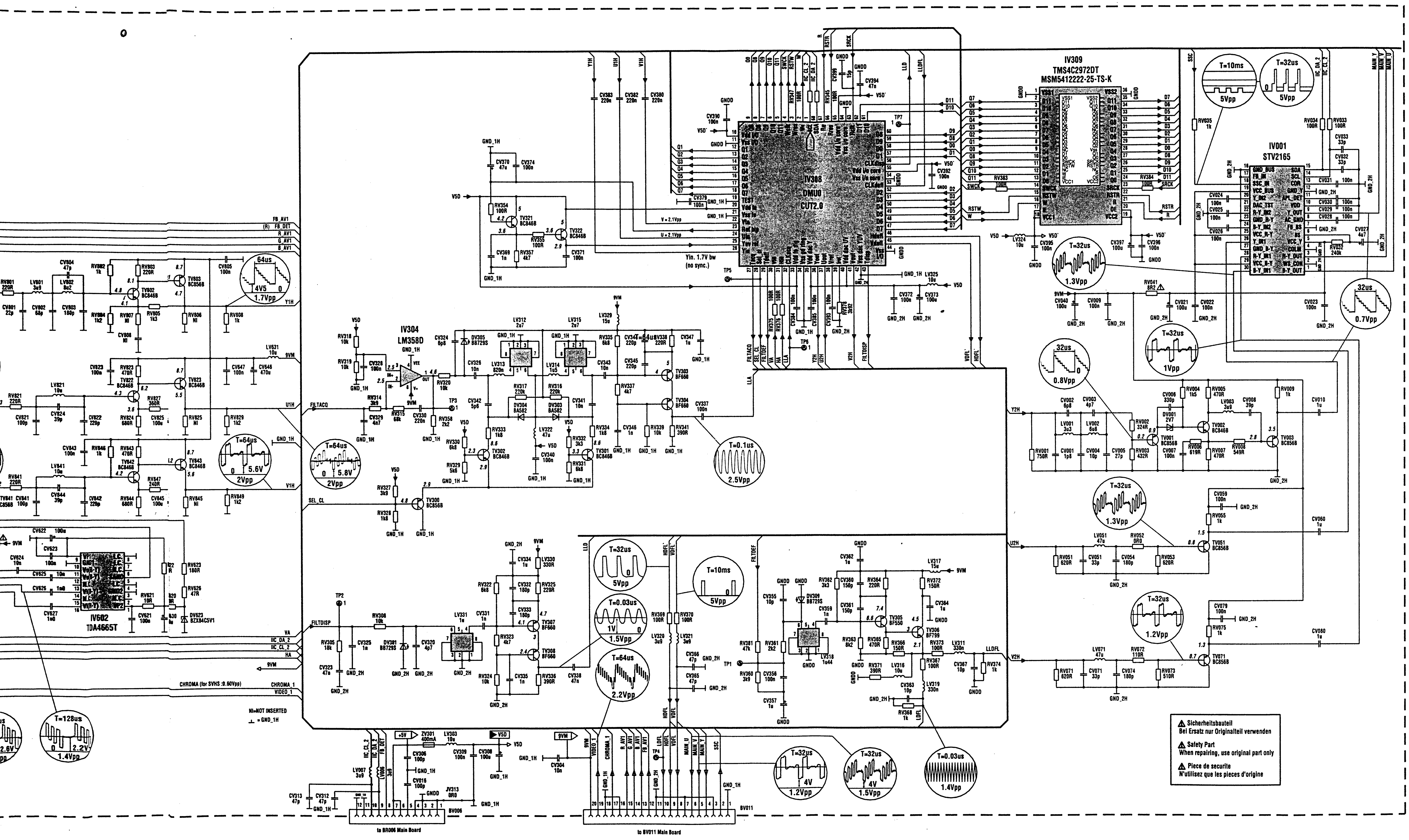
IV309
TMS4C2972DT
MSM5412222-25-TS-K
IV308
DMU0
CUT2.0
IV001
STV2165
IV304
LM358D
IV602
TDA4665T
to BR006 Main Board
to BV011 Main Board
NI=NOT INSERTED
Sicherheitsbauteil
Bei Ersatz nur Originalteil verwenden
Safety Part
When repairing, use original part only
Piece de securite
N'utilisez que les pieces d'origine

# VM19100

COMPONENT SIDE - COTE COMPOSANTS - BESTÜCKUNGSSEITE
LATO COMPONENTI - LADO COMPONENTES

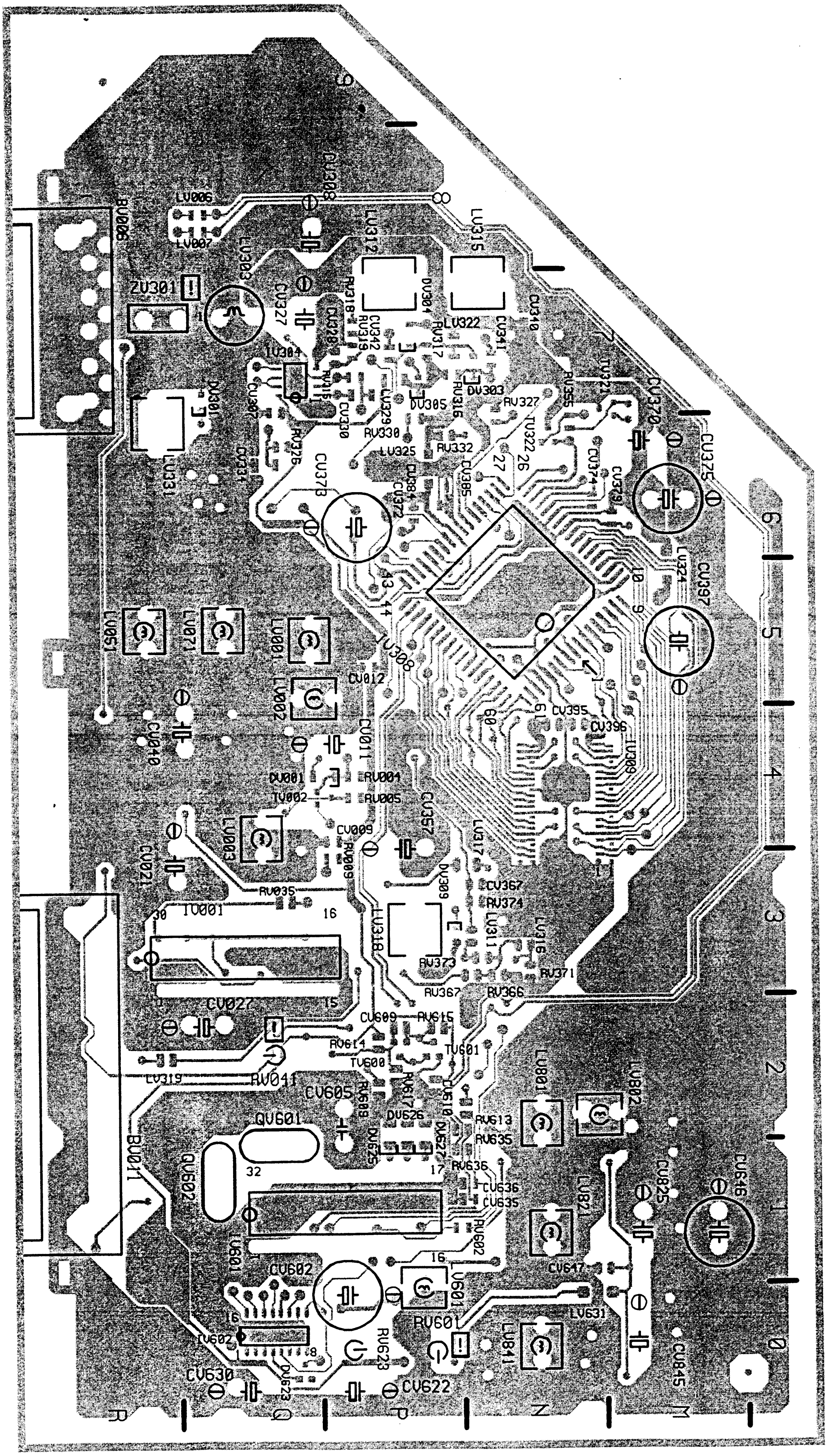

# VM19100

## SOLDER SIDE - CÔTE SOUDURES - LÖTSEITE - LATO SALDATURE - LADO SOLDADURAS

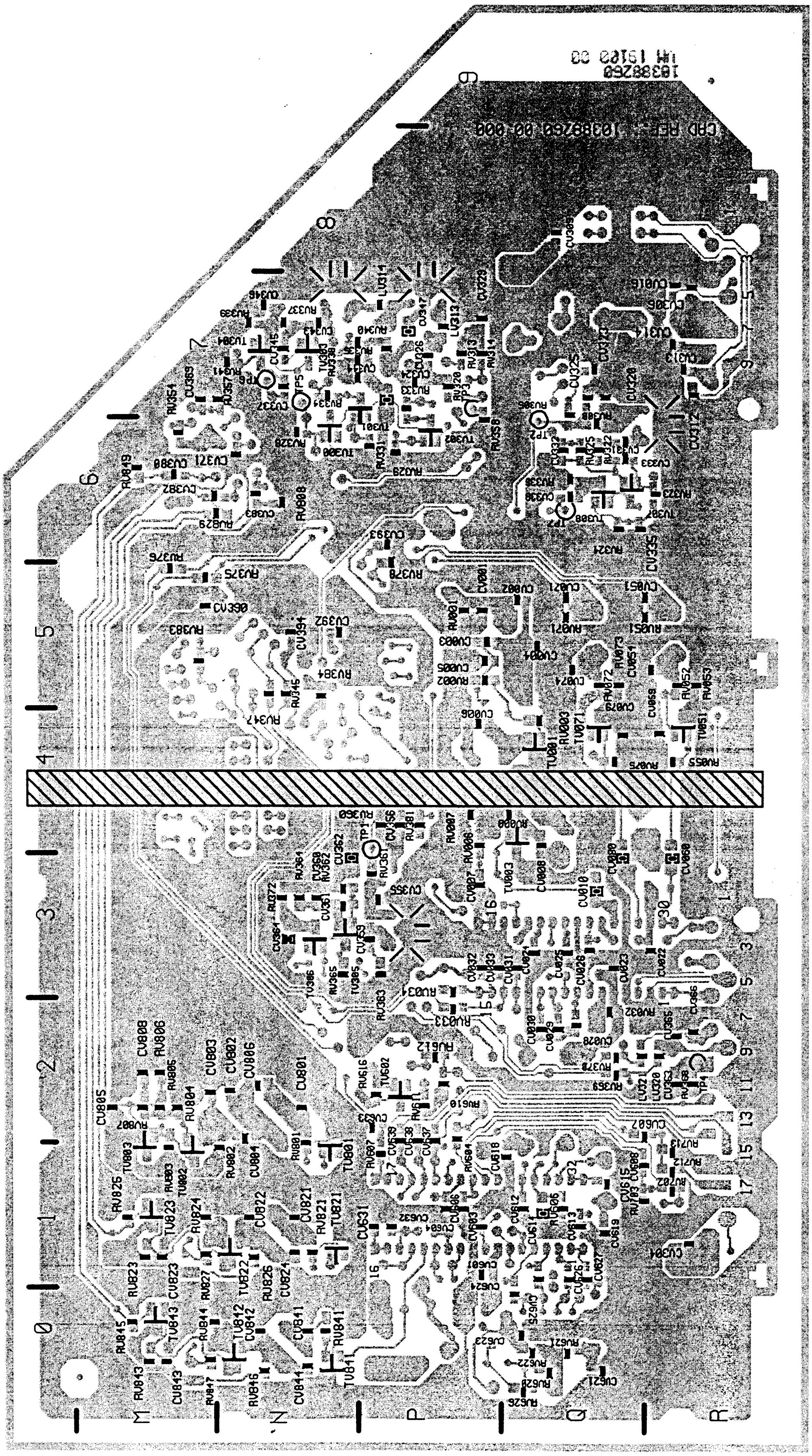

# VIDEO AMPLIFIER BOARD - PLATINE AMPLIFICATEURS VIDEO - VIDEOVERSTÄRKERPLATTE - PIASTRA AMPLIFICATORE VIDEO - PLATINA AMPLIFICADOR VIDEO

## CRT BS19100

COMPONENT SIDE - CÔTE COMPOSANTS - BESTÜCKUNGSSEITE - LATO COMPONENTI - LADO COMPONENTES

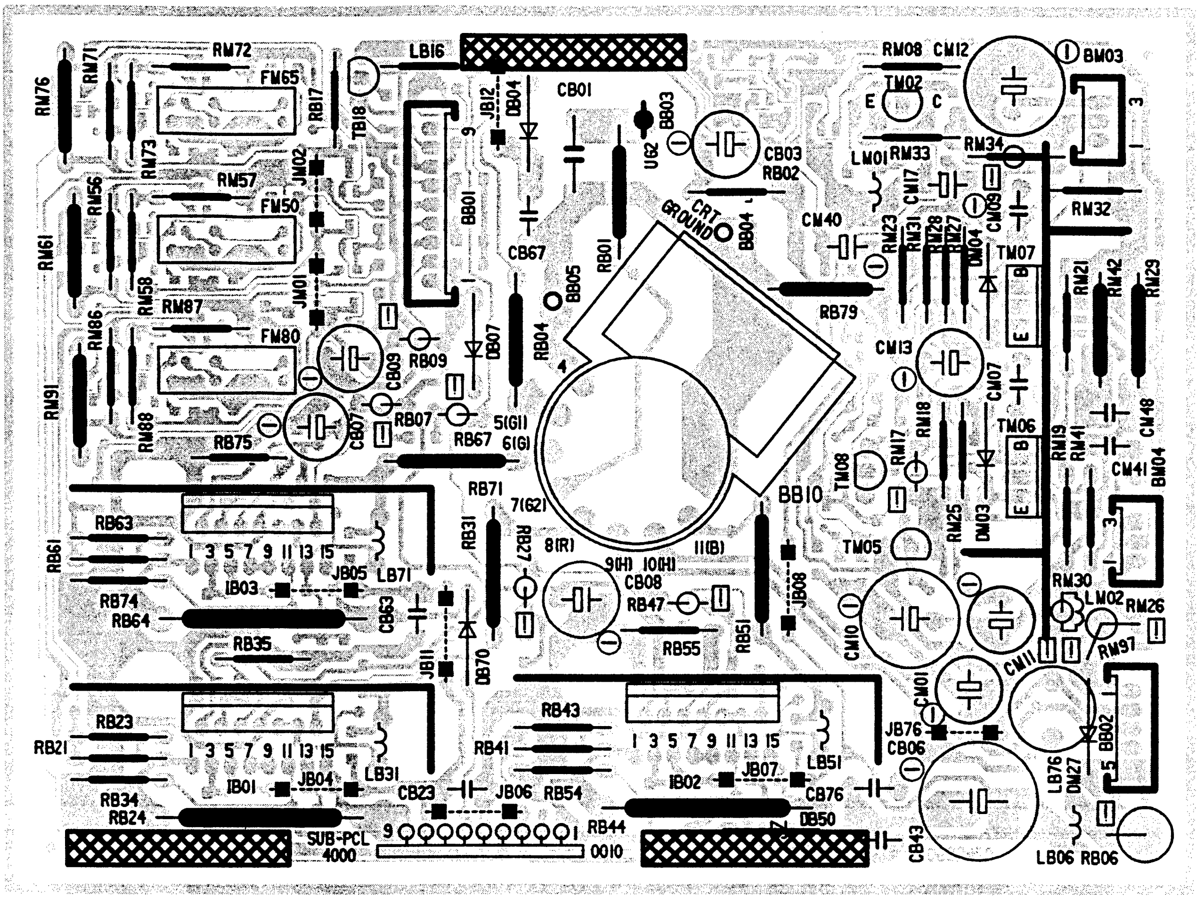

SOLDER SIDE - CÔTE SOUDURES - LÖTSEITE - LATO SALDATURE - LADO SOLDADURAS

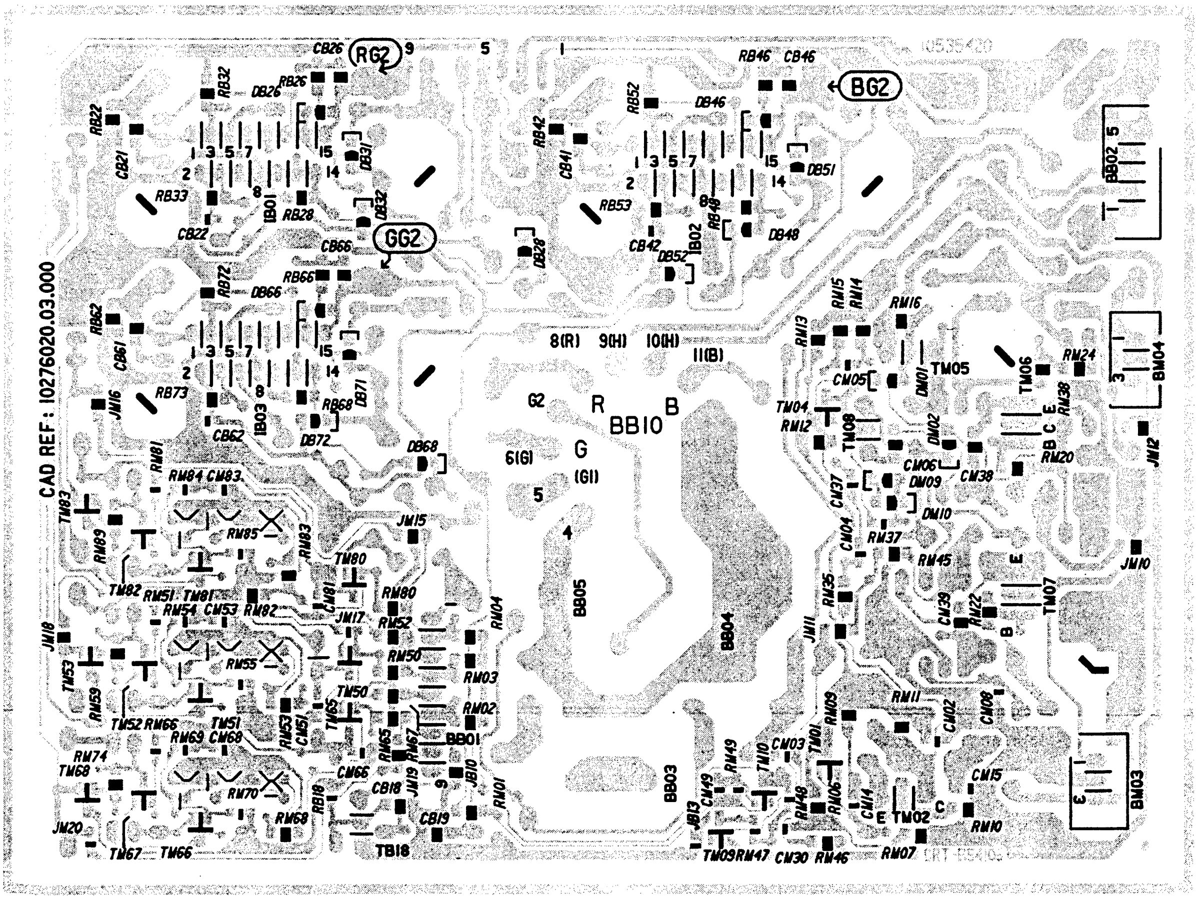

# VIDEO AMPLIFIER BOARD - PLATINE AMPLIFICATEURS VIDEO - VIDEOVERSTÄRKERPLATTE - PIASTRA AMPLIFICATORE VIDEO - PLATINA AMPLIFICADOR VIDEO

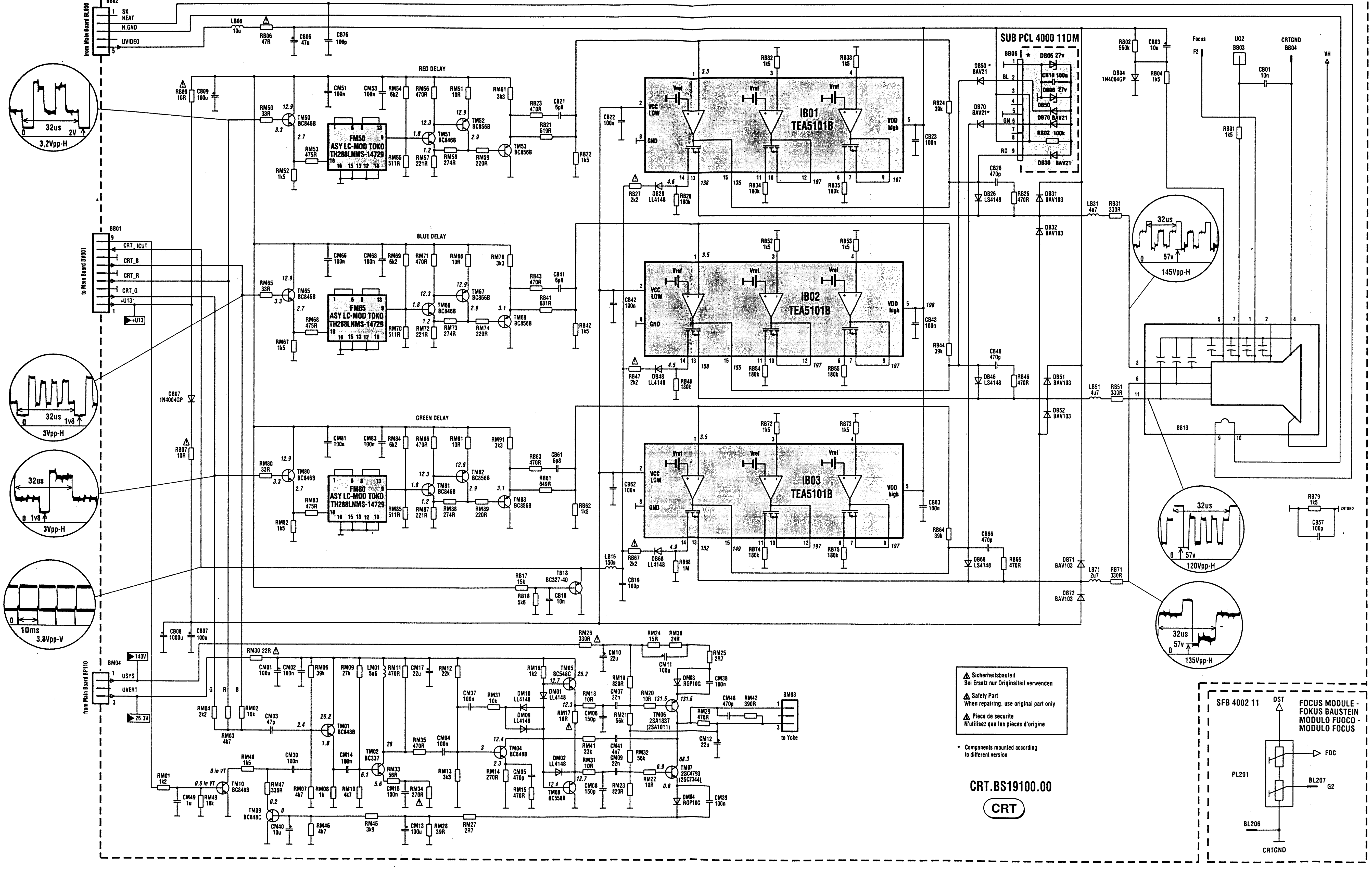

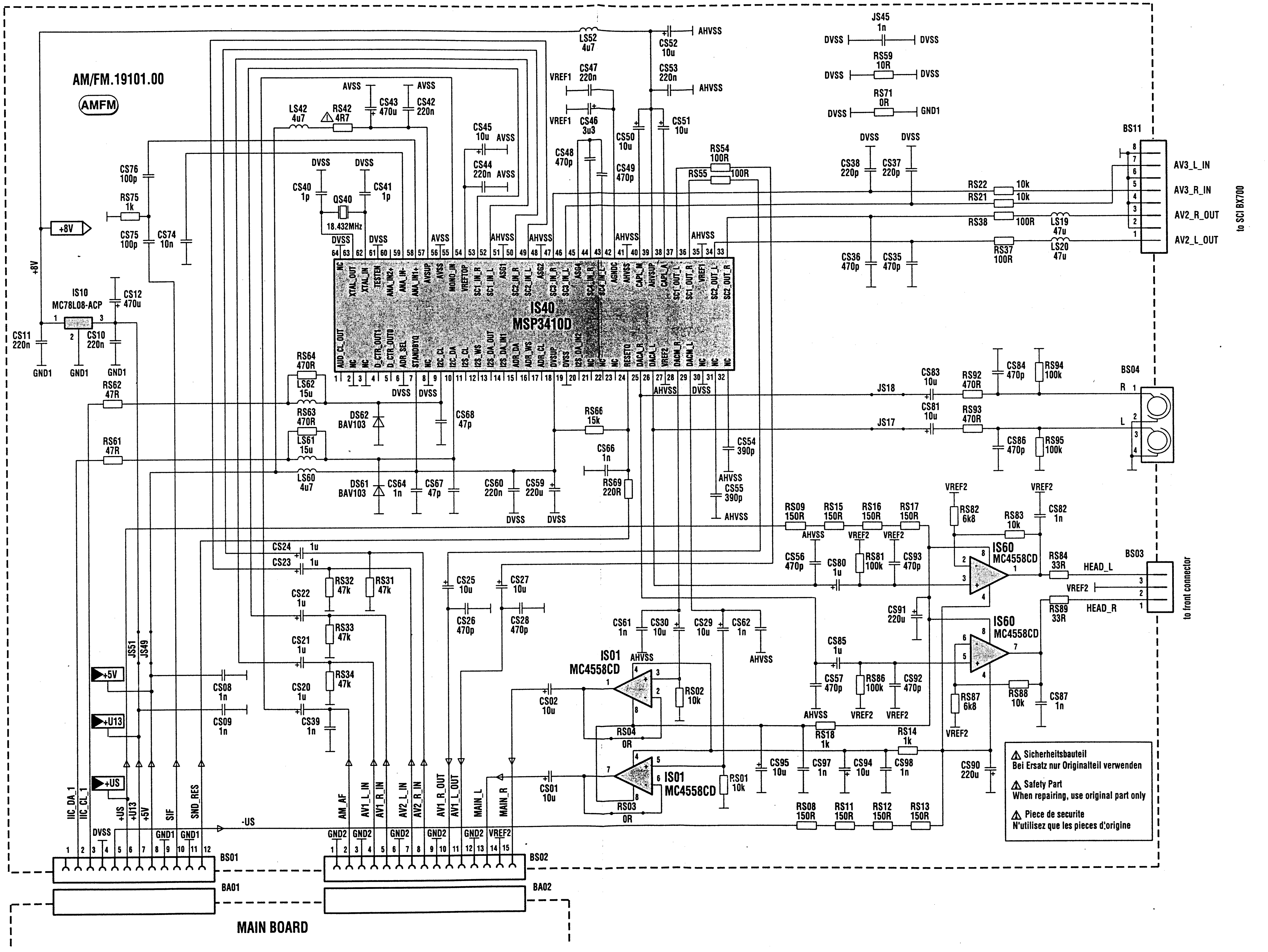

AM/FM.19101.00
AMFM
IS40
MSP3410D
IS10
MC78L08-ACP
IS01
MC4558CD
IS60
MC4558CD
QS40
18.432MHz
BS11
AV3_L_IN
AV3_R_IN
AV2_R_OUT
AV2_L_OUT
to SCI BX700
BS04
BS03
HEAD_L
HEAD_R
to front connector
BS01
BS02
BA01
BA02
MAIN BOARD
IIC_DA_1
IIC_CL_1
+US
+U13
+5V
SIF
SND_RES
AM_AF
AV1_L_IN
AV1_R_IN
AV2_L_IN
AV2_R_IN
AV1_R_OUT
AV1_L_OUT
MAIN_L
MAIN_R
-US
+8V
Sicherheitsbauteil
Bei Ersatz nur Originalteil verwenden
Safety Part
When repairing, use original part only
Piece de securite
N'utilisez que les pieces d'origine

# AM FM 19101

COMPONENT SIDE - COTE COMPOSANTS - BESTÜCKUNGSSEITE
LATO COMPONENTI - LADO COMPONENTES

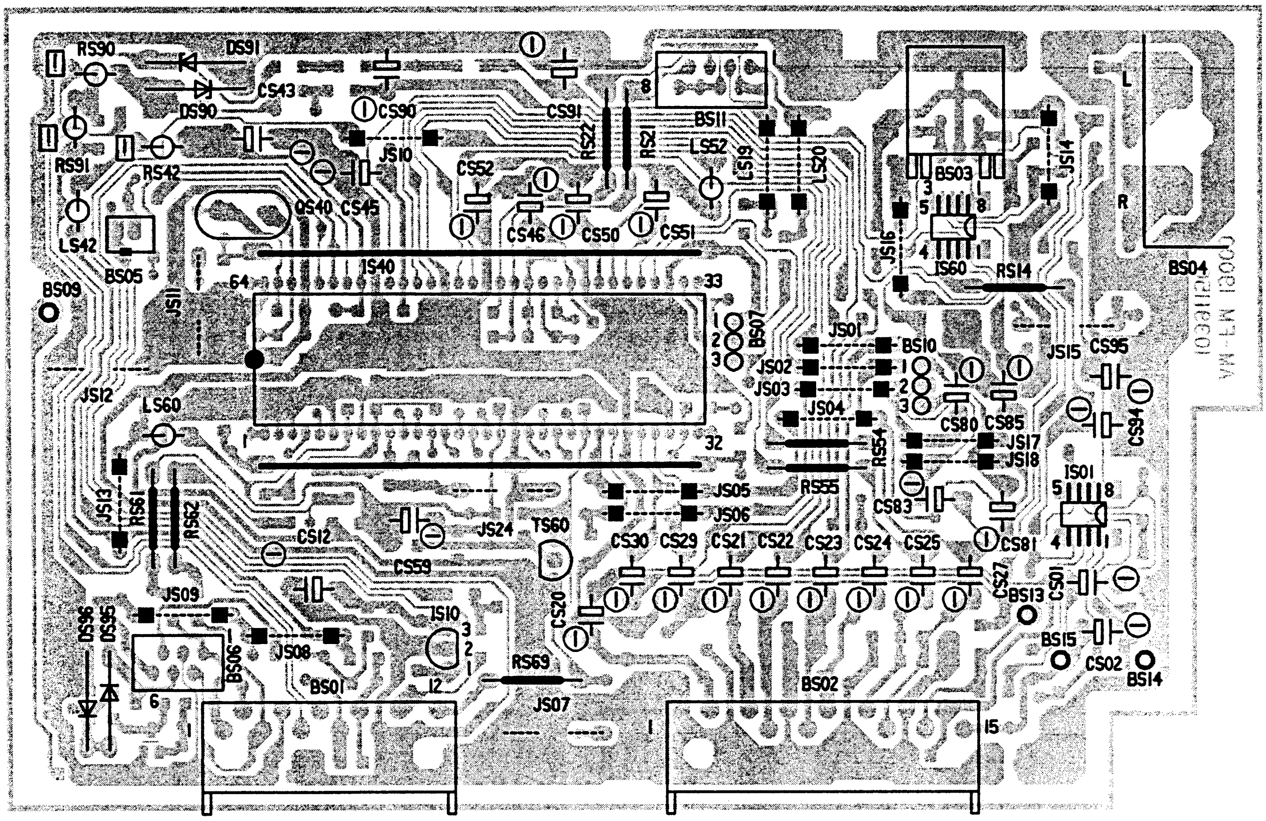

SOLDER SIDE - CÔTE SOUDURES - LÖTSEITE - LATO SALDATURE - LADO SOLDADURAS

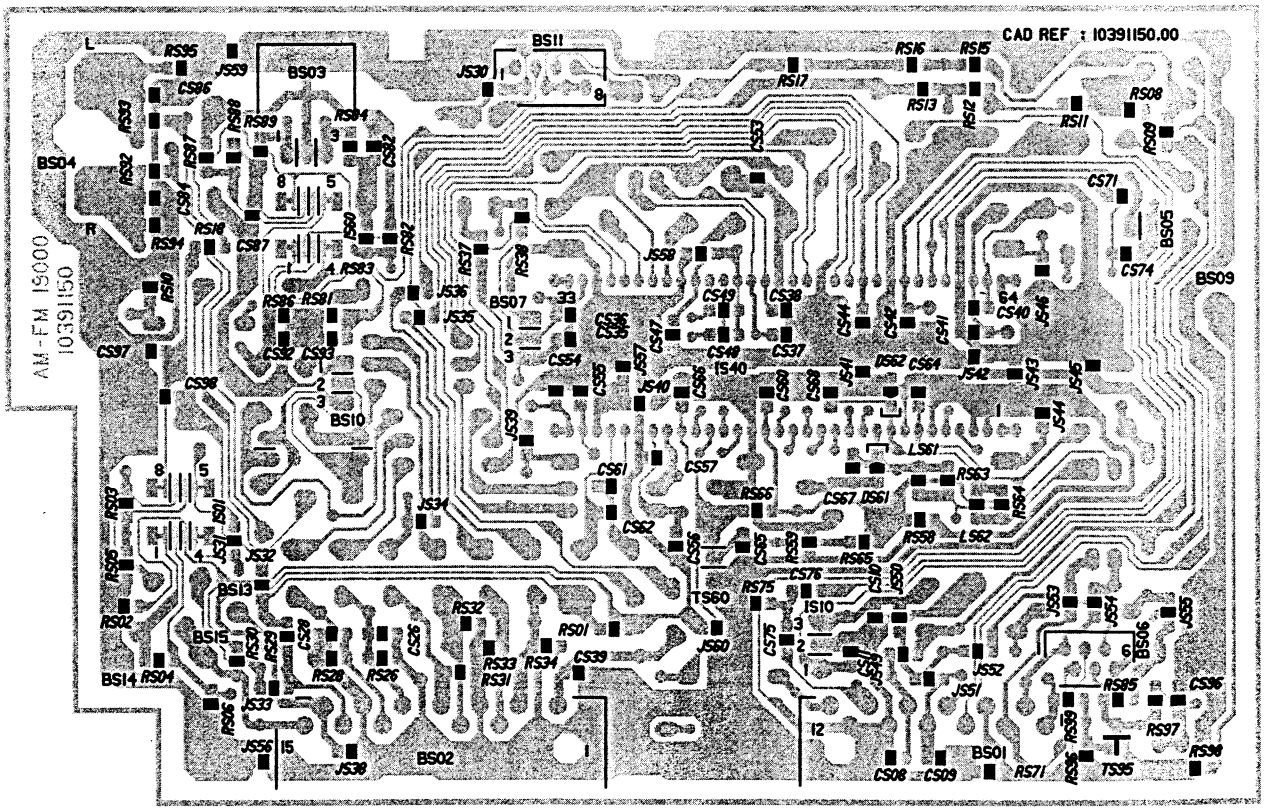

COMPONENT SIDE - COTE COMPOSANTS - BESTÜCKUNGSSEITE
LATO COMPONENTI - LADO COMPONENTES

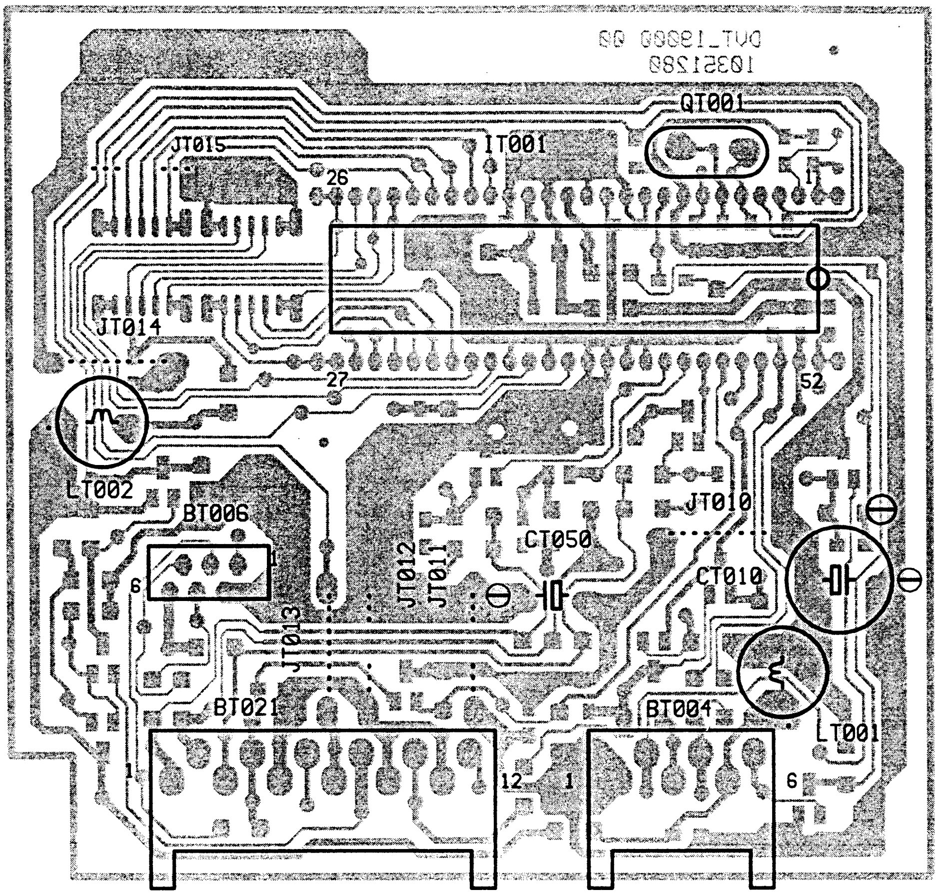


SOLDER SIDE - CÔTE SOUDURES - LÖTSEITE - LATO SALDATURE - LADO SOLDADURAS

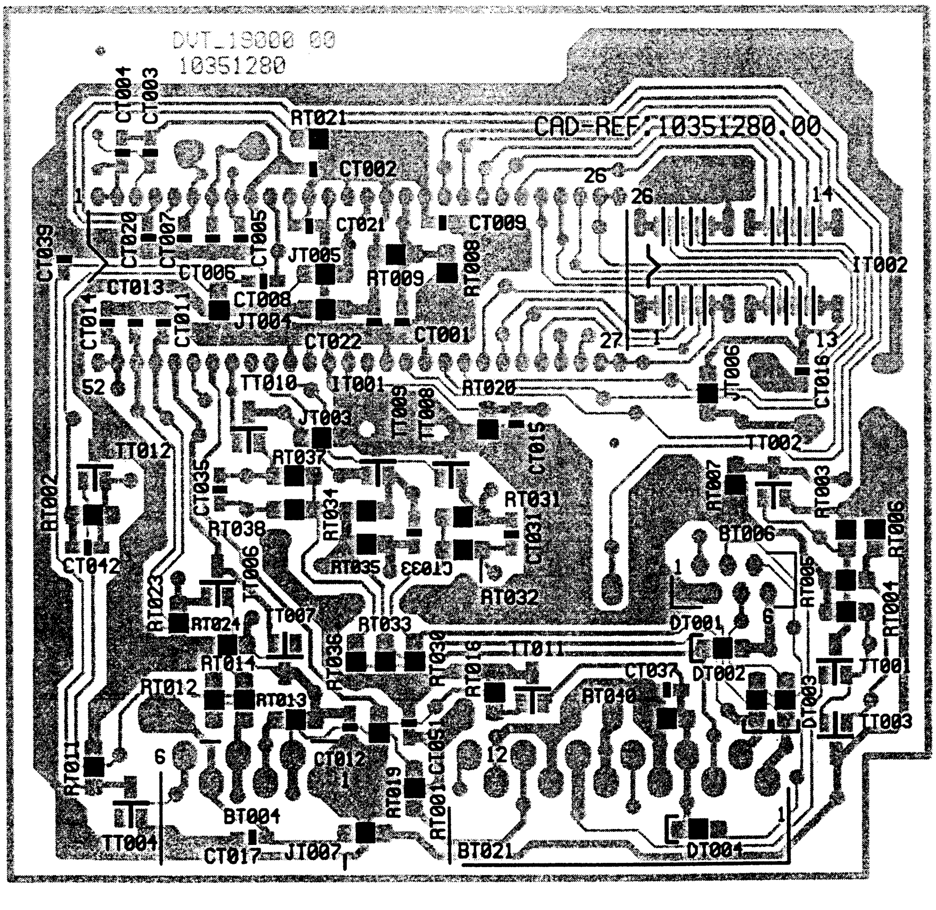

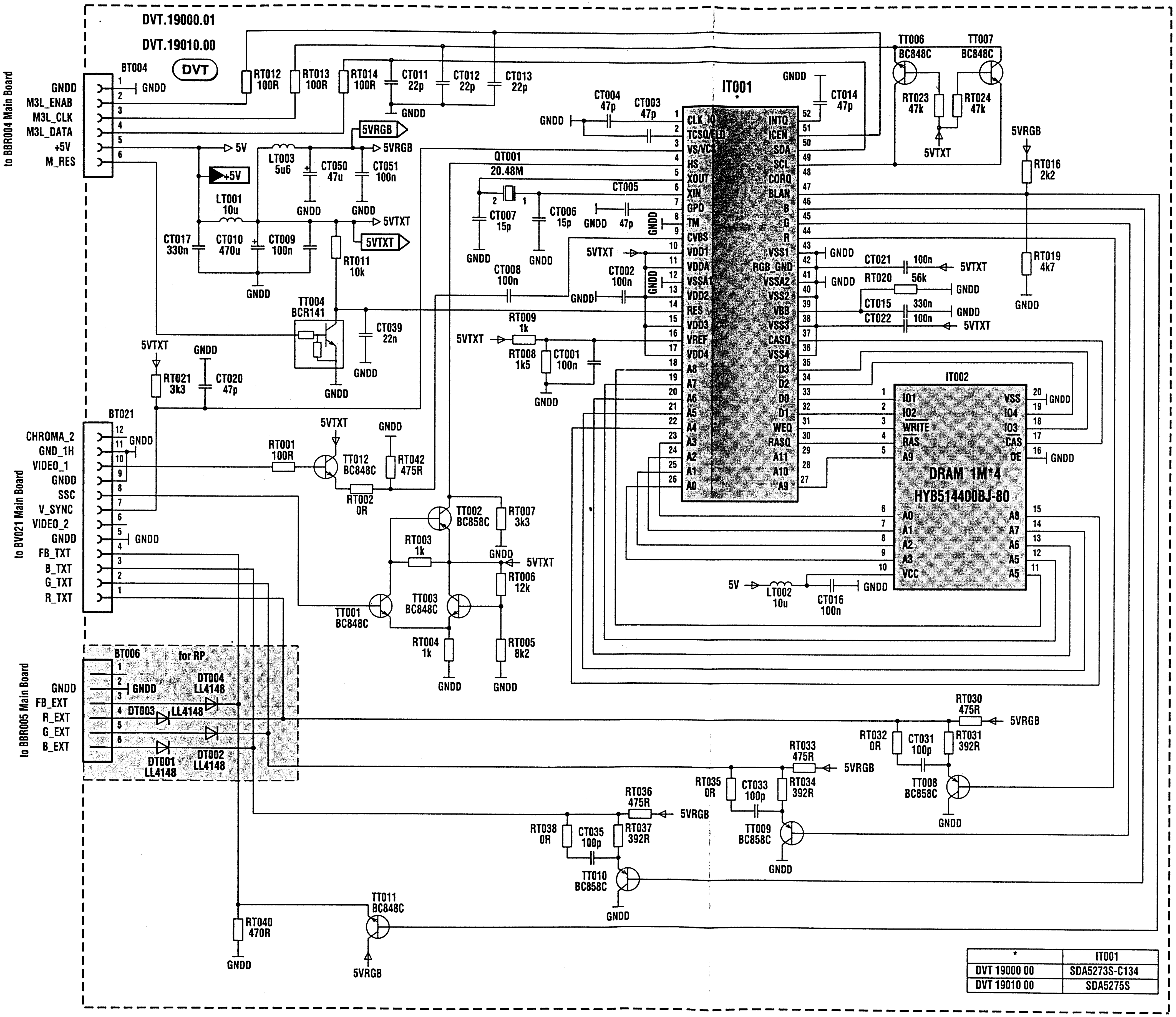
DVT.19000.01
DVT.19010.00
DVT
to BBR004 Main Board
BT004
GNDD
M3L_ENAB
M3L_CLK
M3L_DATA
+5V
M_RES
to BV021 Main Board
BT021
CHROMA_2
GND_1H
VIDEO_1
GNDD
SSC
V_SYNC
VIDEO_2
GNDD
FB_TXT
B_TXT
G_TXT
R_TXT
to BBR005 Main Board
BT006
for RP
GNDD
FB_EXT
R_EXT
G_EXT
B_EXT
DT001 LL4148
DT002 LL4148
DT003 LL4148
DT004 LL4148
IT001
CLK_IO
TCSO/FLD
VS/VCS
HS
XOUT
XIN
GPO
TM
CVBS
VDD1
VDDA
VSSA1
VDD2
RES
VDD3
VREF
VDD4
INTO
ICEN
SDA
SCL
CORQ
BLAN
VSS1
RGB_GND
VSSA2
VSS2
VBB
VSS3
CASQ
VSS4
WEQ
RASQ
IT002
DRAM 1M*4
HYB514400BJ-80
WRITE
RAS
CAS
OE
VCC
QT001
20.48M
TT004 BCR141
TT006 BC848C
TT007 BC848C
TT012 BC848C
TT002 BC858C
TT001 BC848C
TT003 BC848C
TT008 BC858C
TT009 BC858C
TT010 BC858C
TT011 BC848C
LT001 10u
LT002 10u
LT003 5u6
5VRGB
5VTXT
5V
+5V

| * | IT001 |
| --- | --- |
| DVT 19000 00 | SDA5273S-C134 |
| DVT 19010 00 | SDA5275S |

# SCART INTERFACE MODULE - MODULE INTERFACE PERITELEVISION - SCART INTERFACE - MODULO PRESA PERITEL - MODULO EUROTOMA

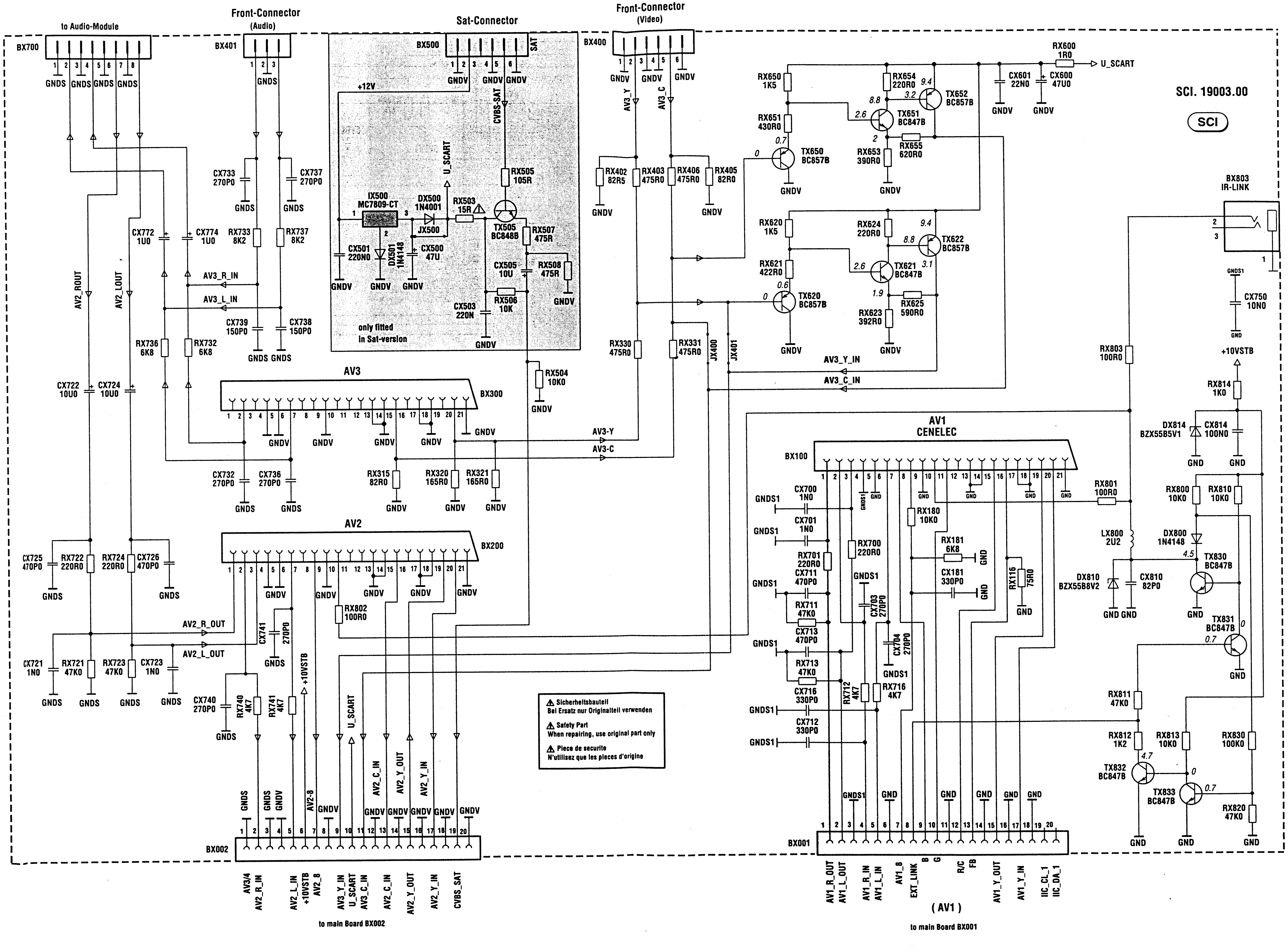

COMPONENT SIDE - COTE COMPOSANTS - BESTÜCKUNGSSEITE
LATO COMPONENTI - LADO COMPONENTES

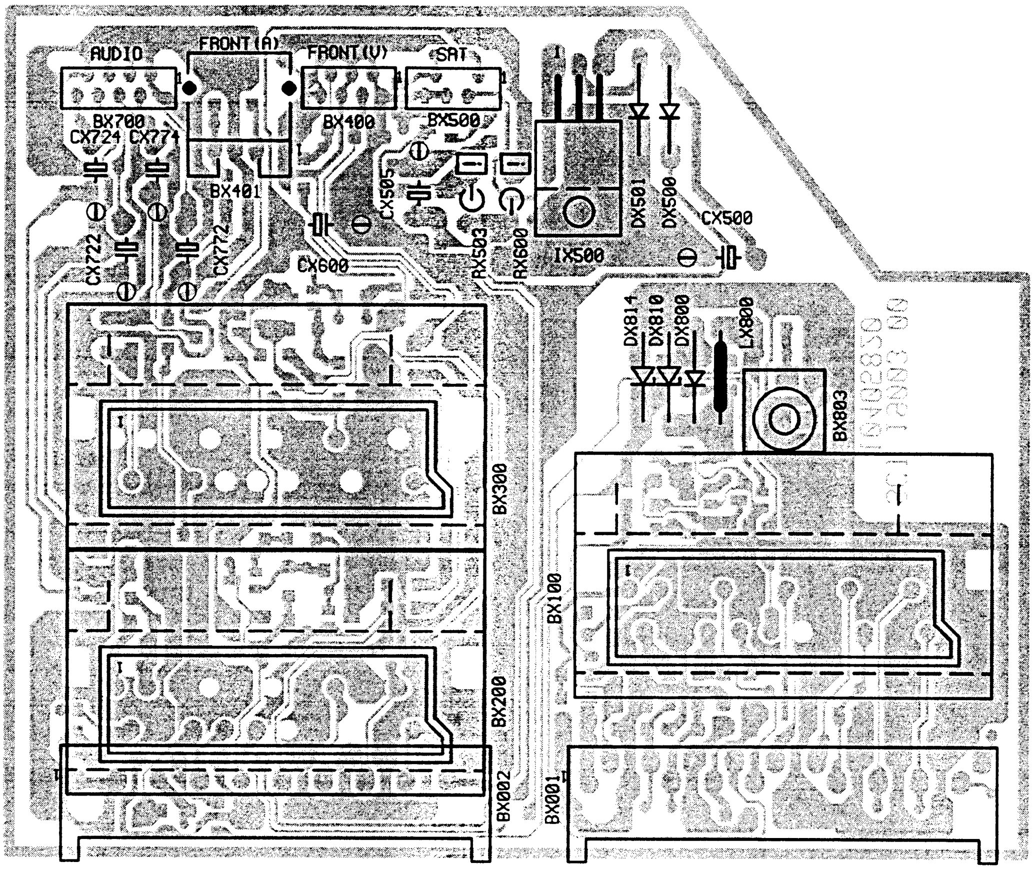

SOLDER SIDE - CÔTE SOUDURES - LÖTSEITE - LATO SALDATURE - LADO SOLDADURAS

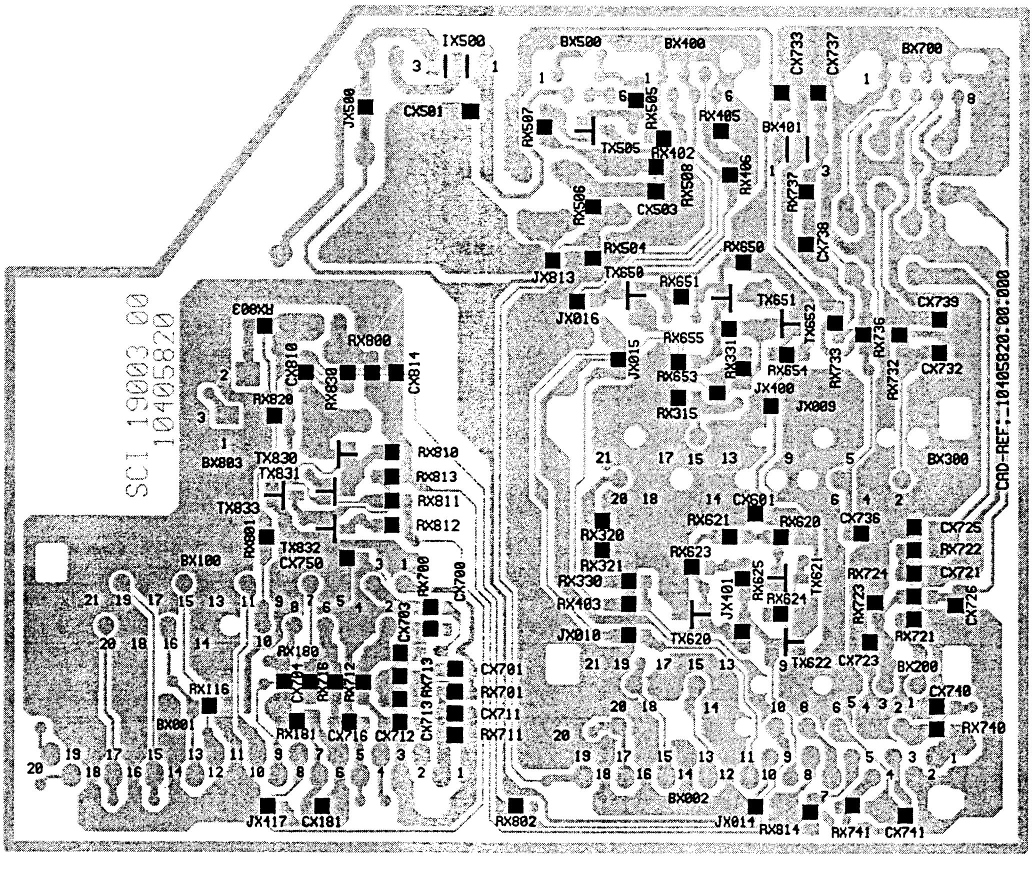

# FRONT CONNECTOR BOARD - PRISES EN FACADE ET INTERCONNEXION DU CLAVIER - FRONT ANSCHLUSSPLATTE - PIASTRA CONNESSIONE FRONTALE - PLÁTINA MANDOS FRONTAL

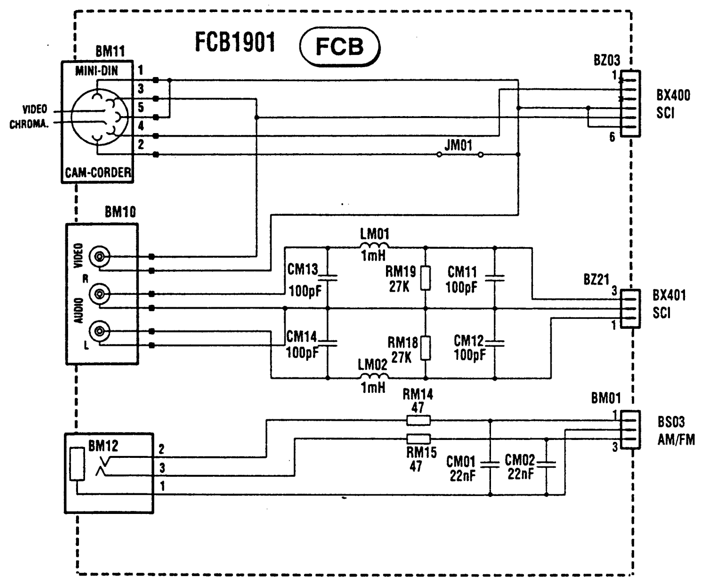


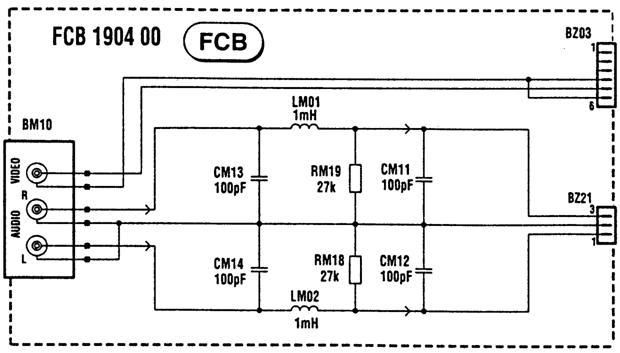


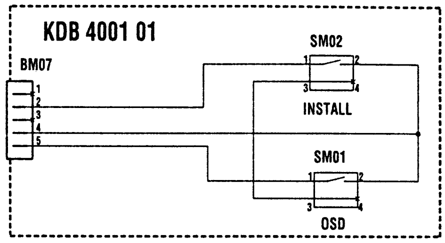


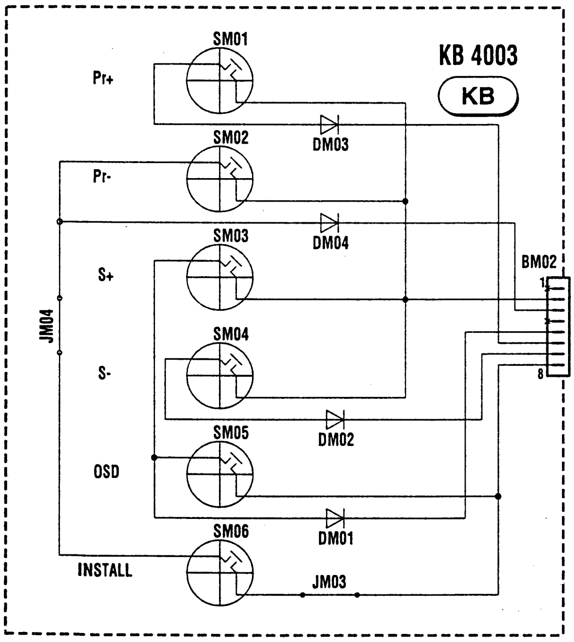


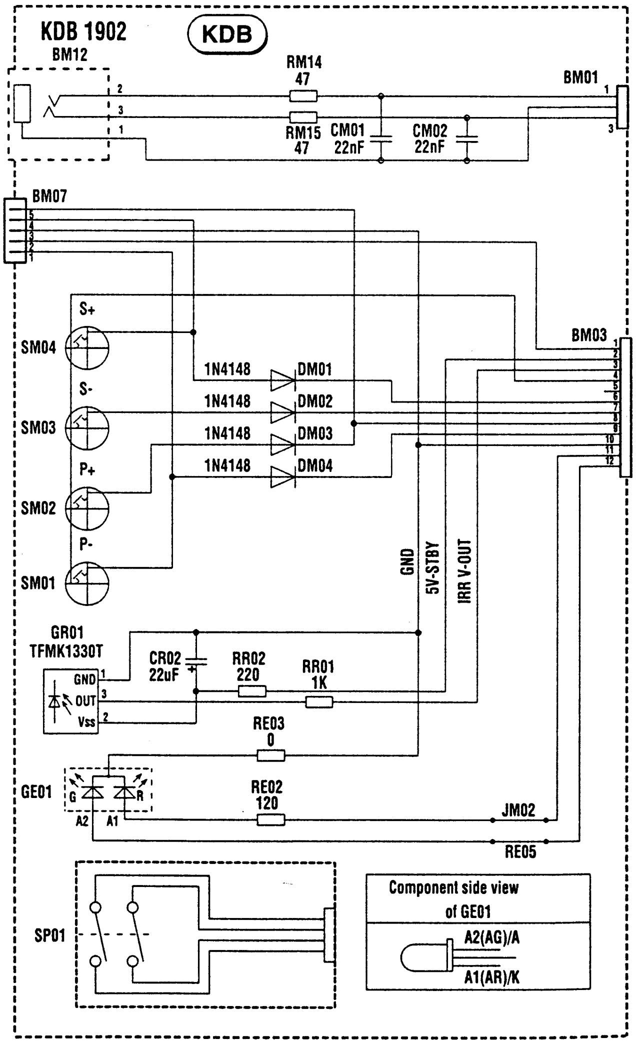


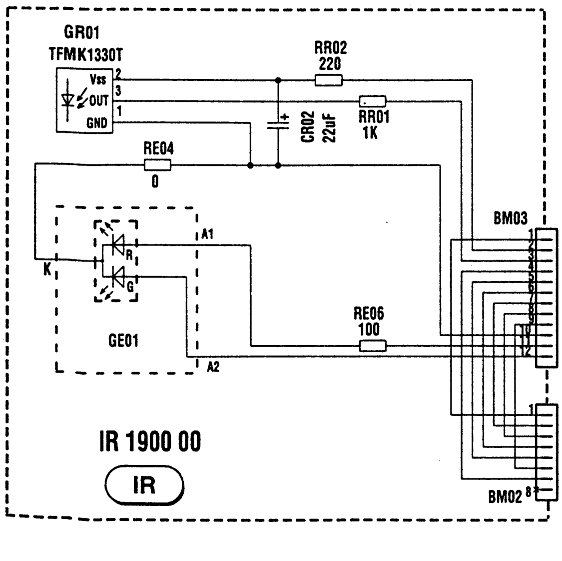

## FCB 1901 - FCB 9069

COMPONENT SIDE - COTE COMPOSANTS -
BESTÜCKUNGSSEITE - LATO COMPONENTI
LADO COMPONENTES

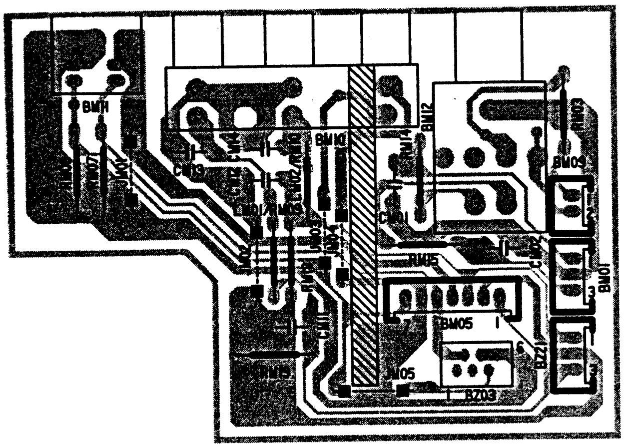


SOLDER SIDE - CÔTE SOUDURES -
LÖTSEITE - LATO SALDATURE -
LADO SOLDADURAS

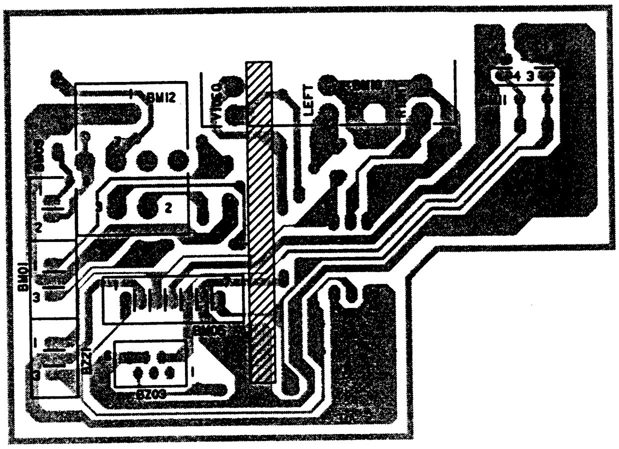


## KDB 1902 - KDB 9003

COMPONENT SIDE - COTE COMPOSANTS -
BESTÜCKUNGSSEITE - LATO COMPONENTI
LADO COMPONENTES

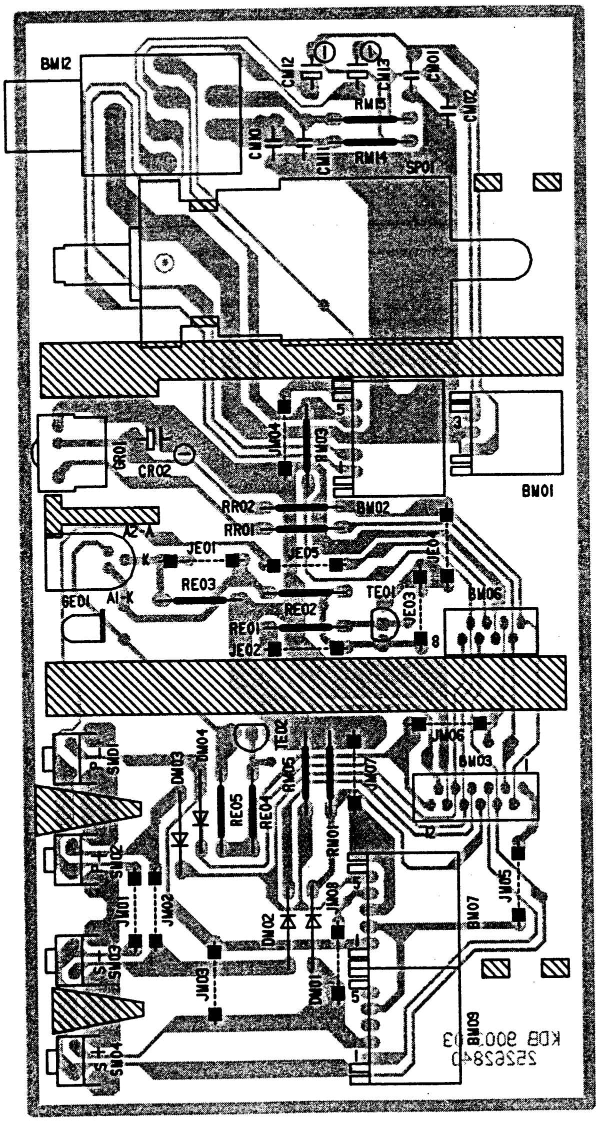


SOLDER SIDE - CÔTE SOUDURES -
LÖTSEITE - LATO SALDATURE -
LADO SOLDADURAS

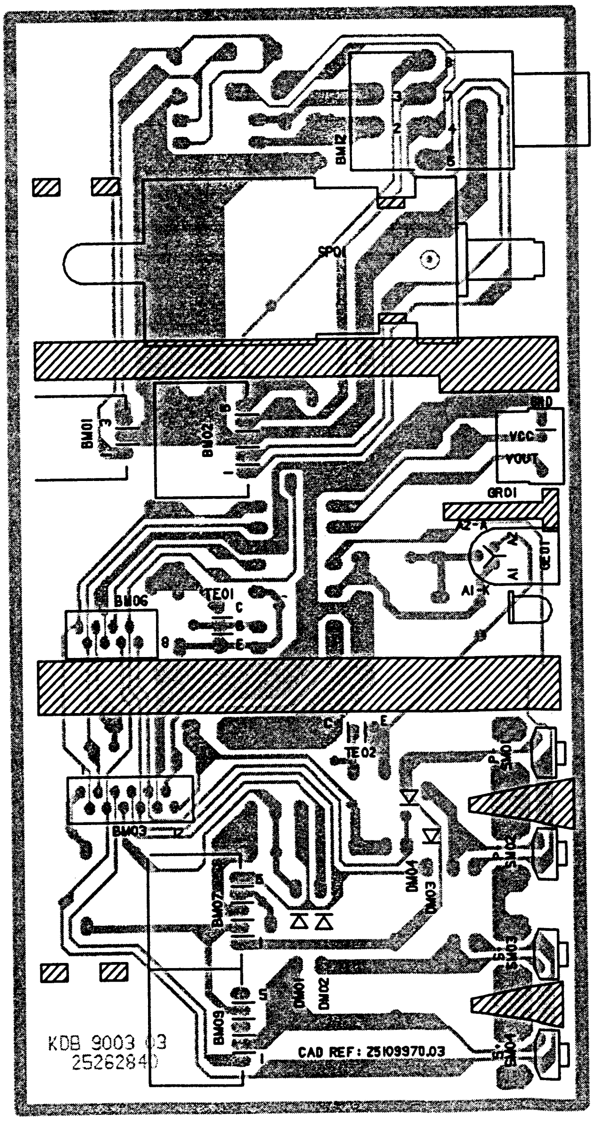

COMPONENT SIDE - COTE COMPOSANTS - BESTÜCKUNGSSEITE - LATO COMPONENTI LADO COMPONENTES

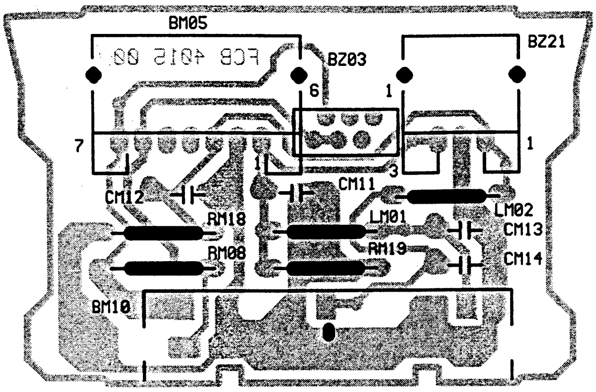


SOLDER SIDE - CÔTE SOUDURES - LÖTSEITE - LATO SALDATURE - LADO SOLDADURAS

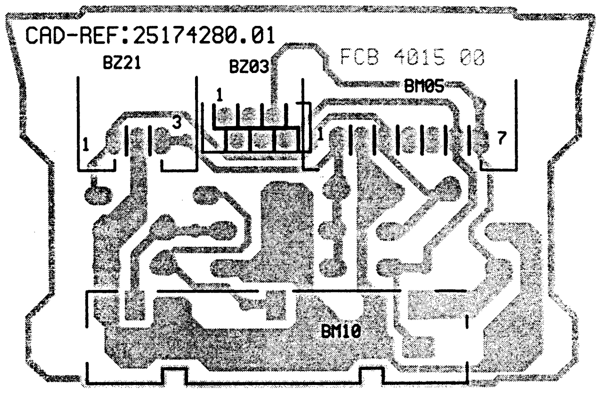


## KB4003

COMPONENT SIDE - COTE COMPOSANTS - BESTÜCKUNGSSEITE - LATO COMPONENTI LADO COMPONENTES

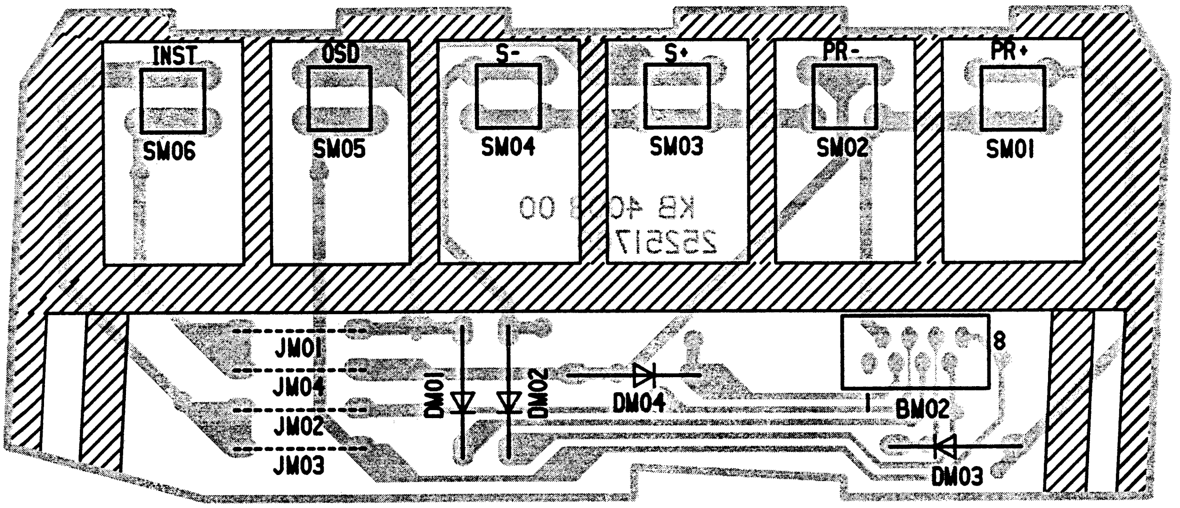


SOLDER SIDE - CÔTE SOUDURES - LÖTSEITE - LATO SALDATURE - LADO SOLDADURAS

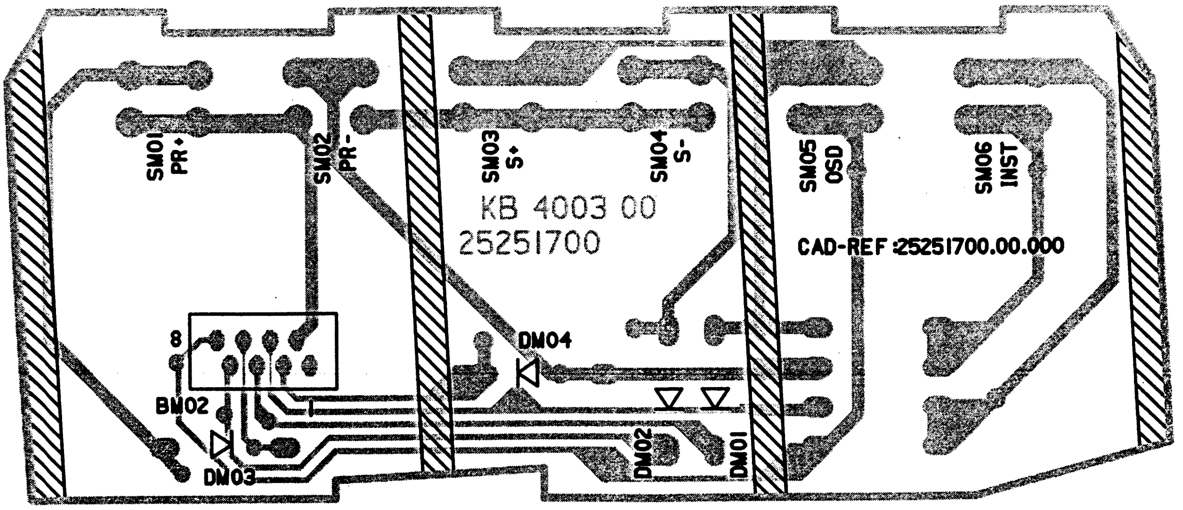

# AUDIO SIGNAL/DOLBY MODULE - MODULE AUDIO/DOLBY - TON SIGNAL/DOLBY BAUSTEIN - MODULO AUDIO/DOLBY - MÓDULO AUDIO/DOLBY

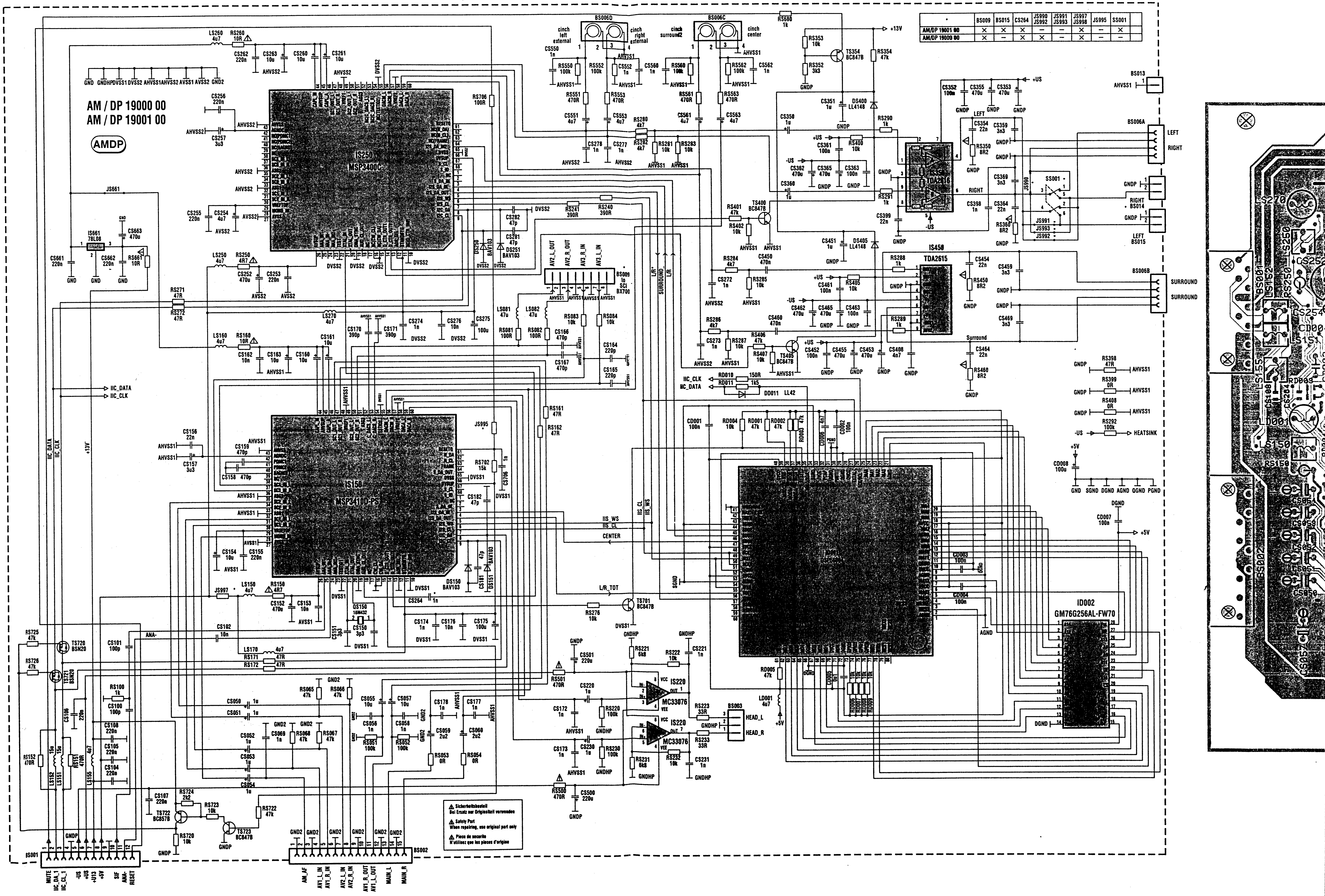


| • | BS009 | BS015 | CS264 | JS990 JS992 | JS991 JS993 | JS997 JS998 | JS995 | SS001 | |
|---|---|---|---|---|---|---|---|---|---|
| AM/DP 19001 00 | X | X | X | – | – | X | – | X | |
| AM/DP 19000 00 | X | – | X | X | – | X | – | – | |

⚠ Sicherheitsbauteil
Bei Ersatz nur Originalteil verwenden

⚠ Safety Part
When repairing, use original part only

⚠ Piece de securite
N'utilisez que les pieces d'origine

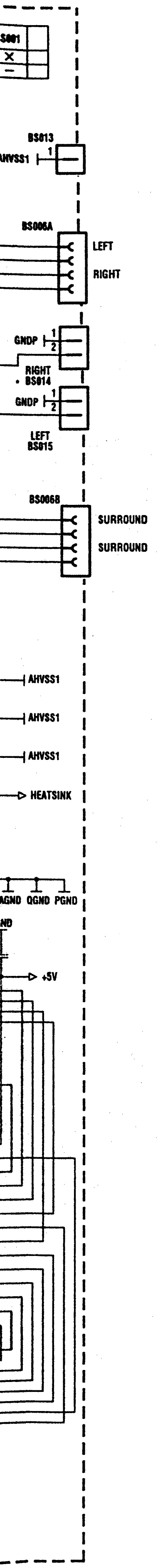


COMPONENT SIDE - COTE COMPOSANTS - BESTÜCKUNGSSEITE
LATO COMPONENTI - LADO COMPONENTES

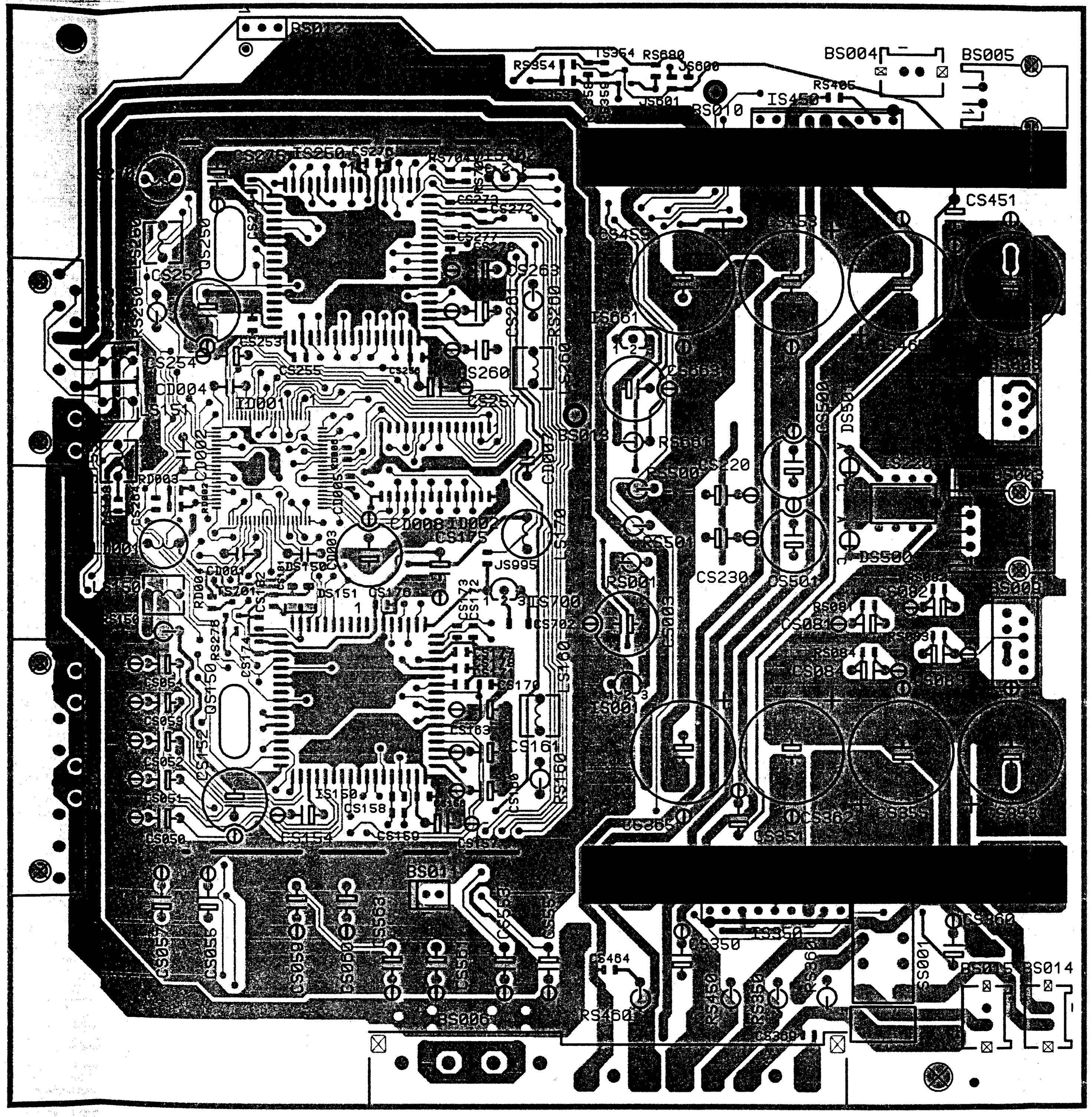


SOLDER SIDE - CÔTE SOUDURES - LÖTSEITE - LATO SALDATURE - LADO SOLDADURAS

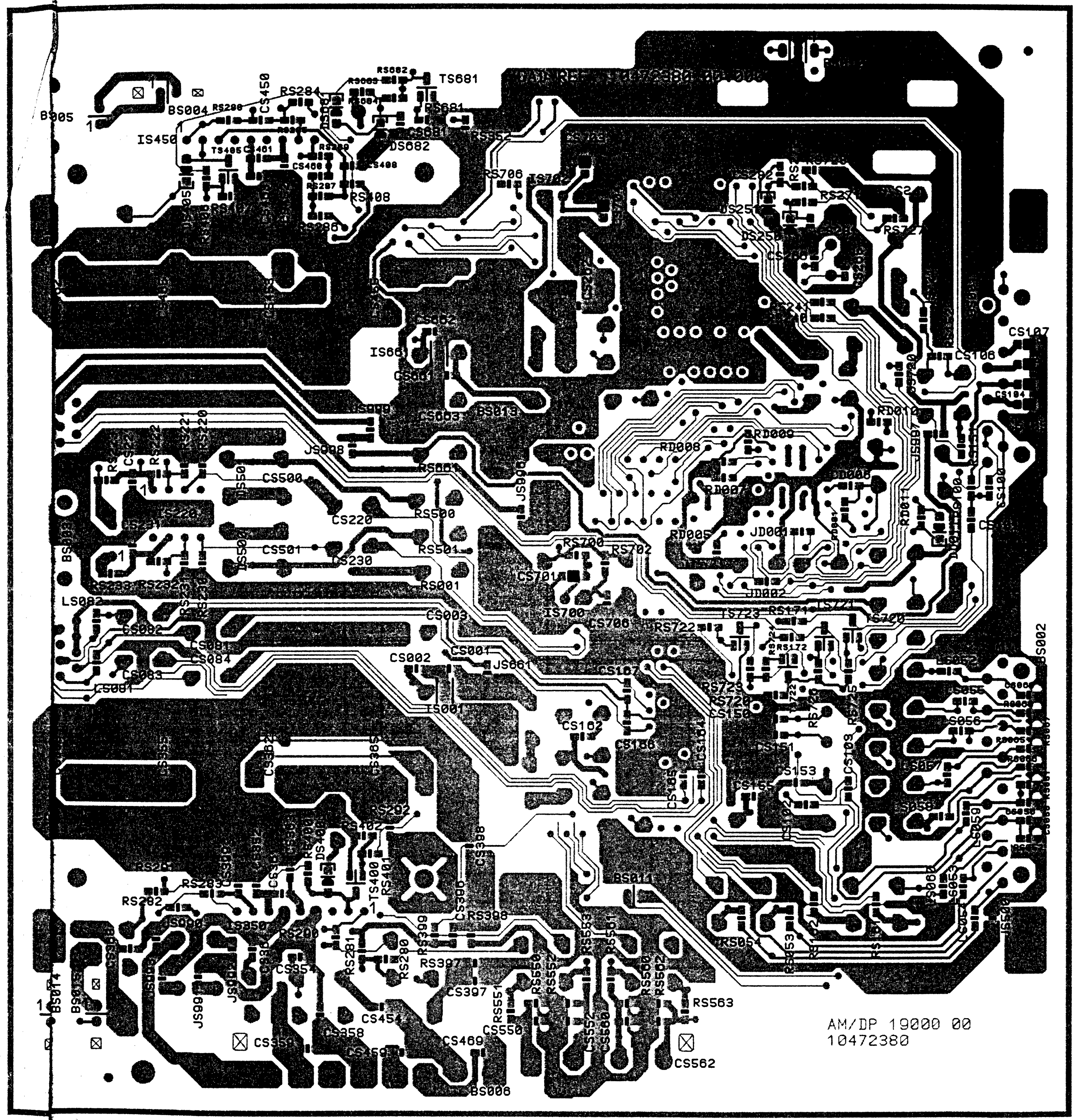

## VHF / UHF TUNER CTT5000

( For information only )

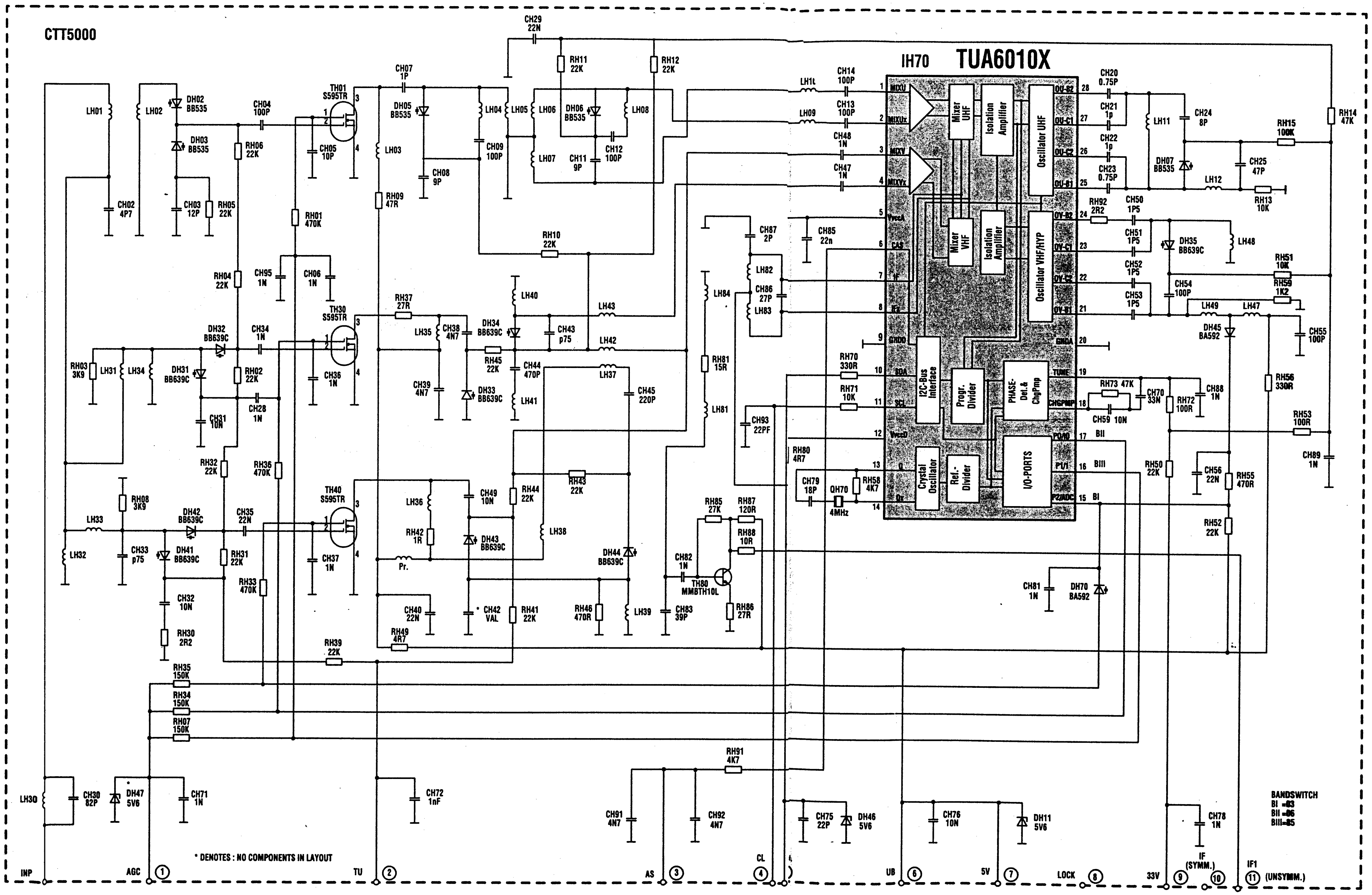


## IS40 - MSP3410

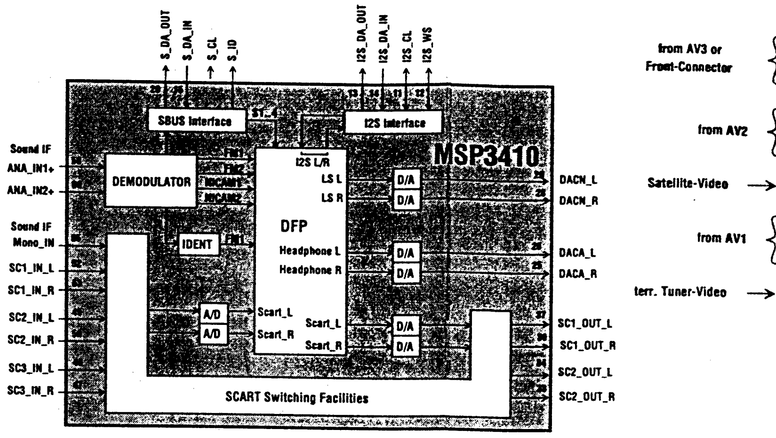


## II50 - TDA9811

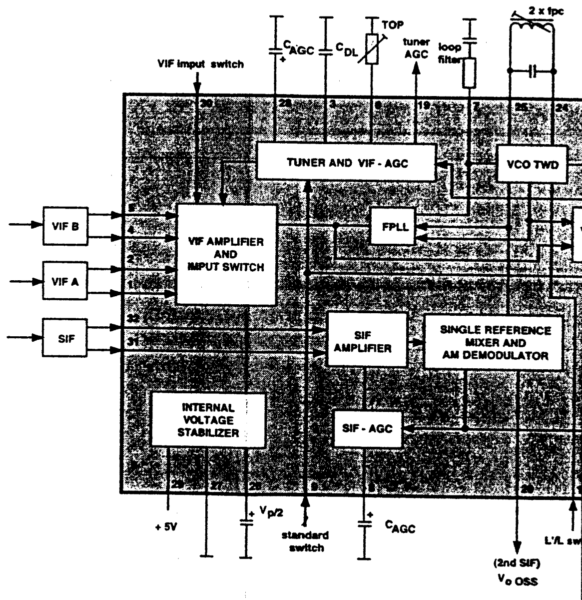


## IV602 - TDA4665

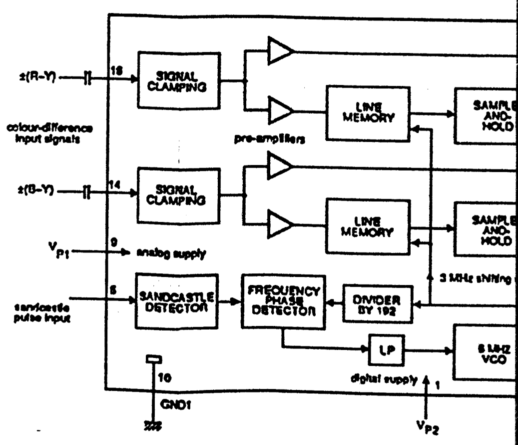

# INTEGRATED CIRCUITS BLOCK DIAGRAMS - SYNOPTIQUES INTERNES DES CIRCUITS INTEGRES - INTEGRIERTE SCHALTUNGEN BLOCKSCHALTBILDER
# SCHEMA A BLOCCHI DEL CIRCUITI INTEGRATI - VISTA INTERNA DE LOS CIRCUITOS INTEGRADOS

## ISP3410

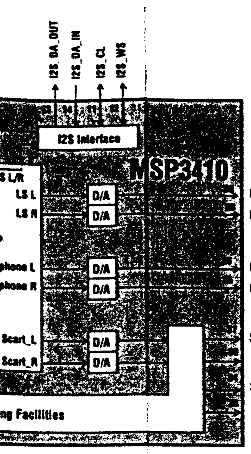


## IX900 - TEA6415C

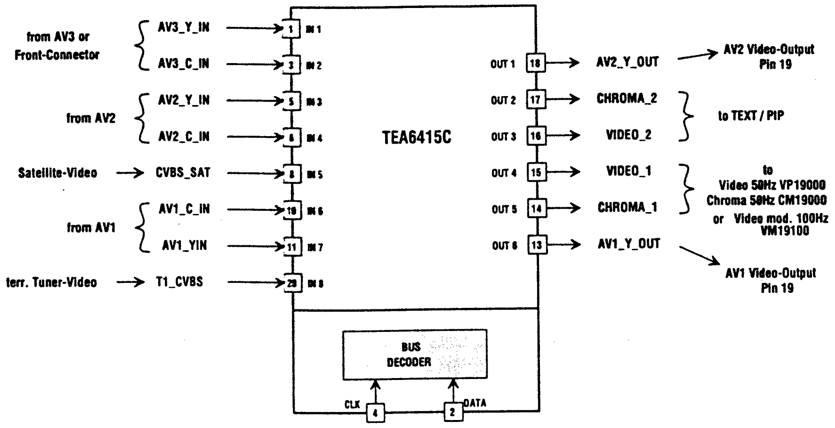


## IV601 - TDA9143

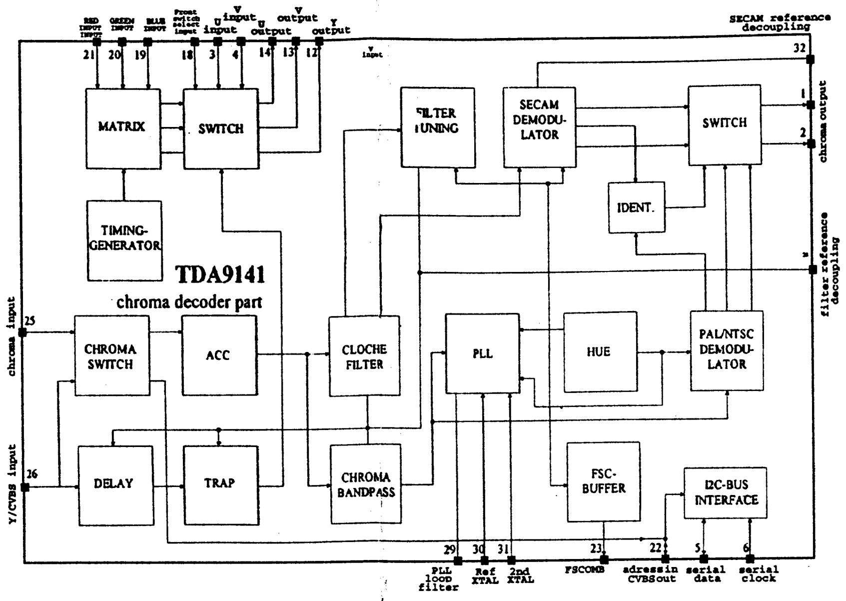


## IV001 - STV2165

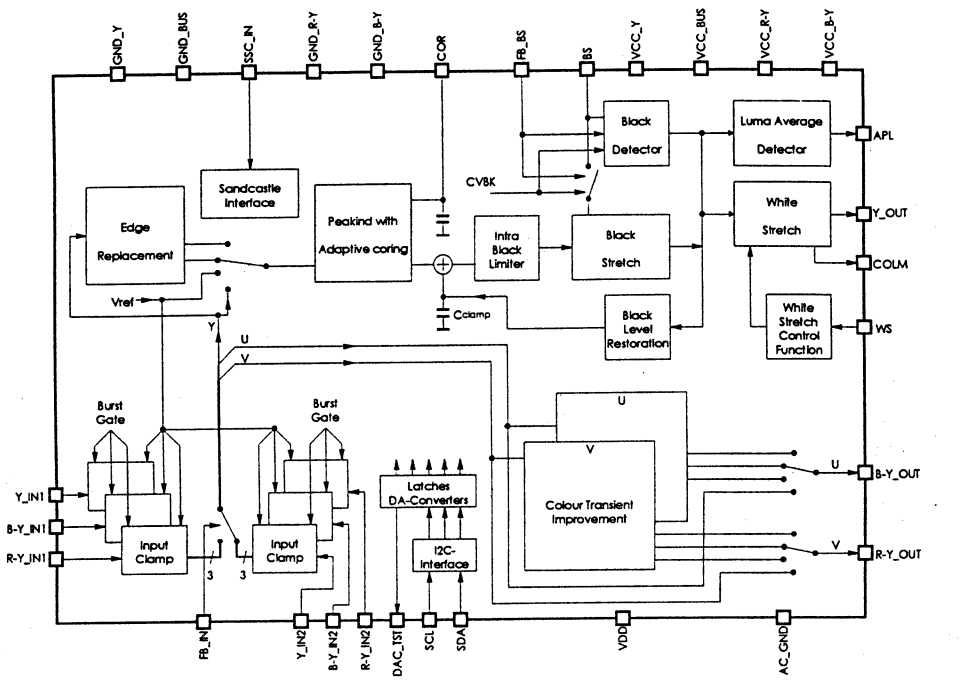


## II50 - TDA9811

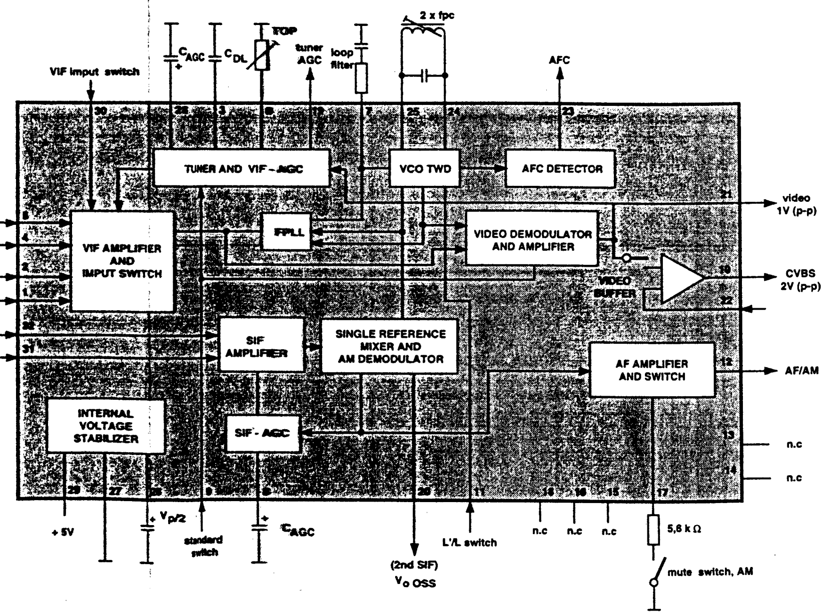


## IV602 - TDA4665T

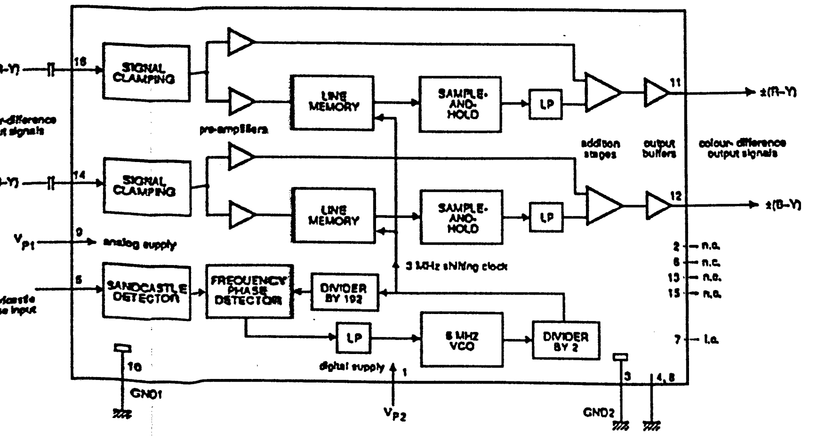


## IR01 - ST90R92

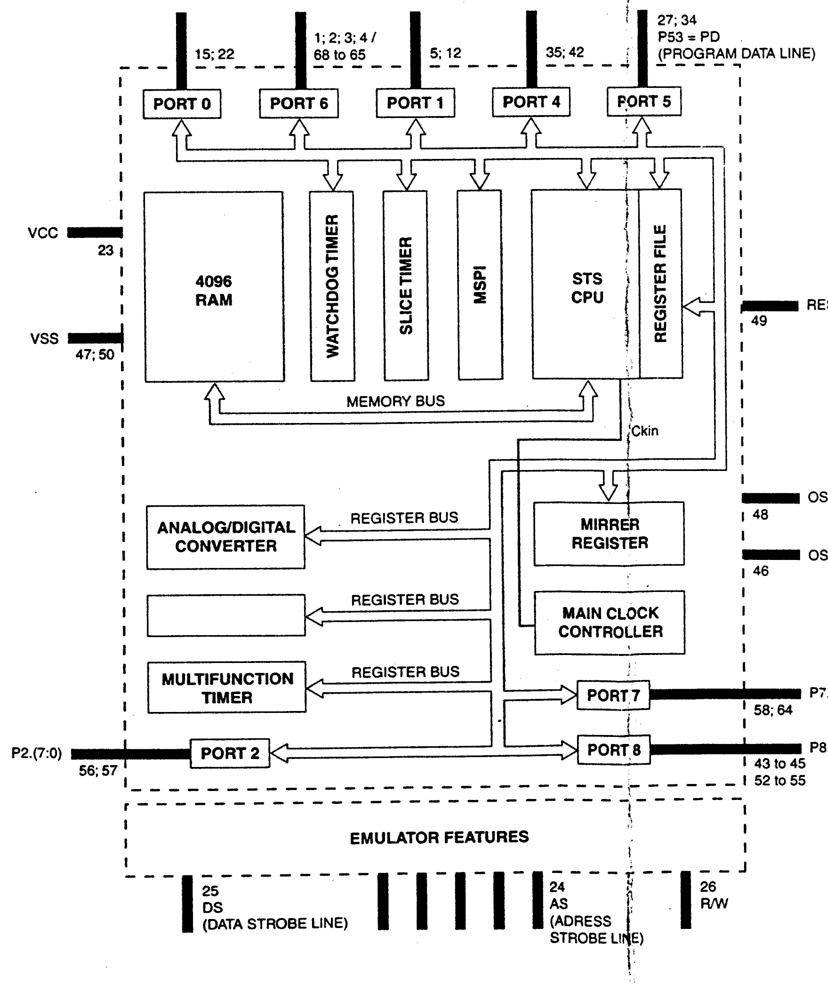


## IV308 - DMU0

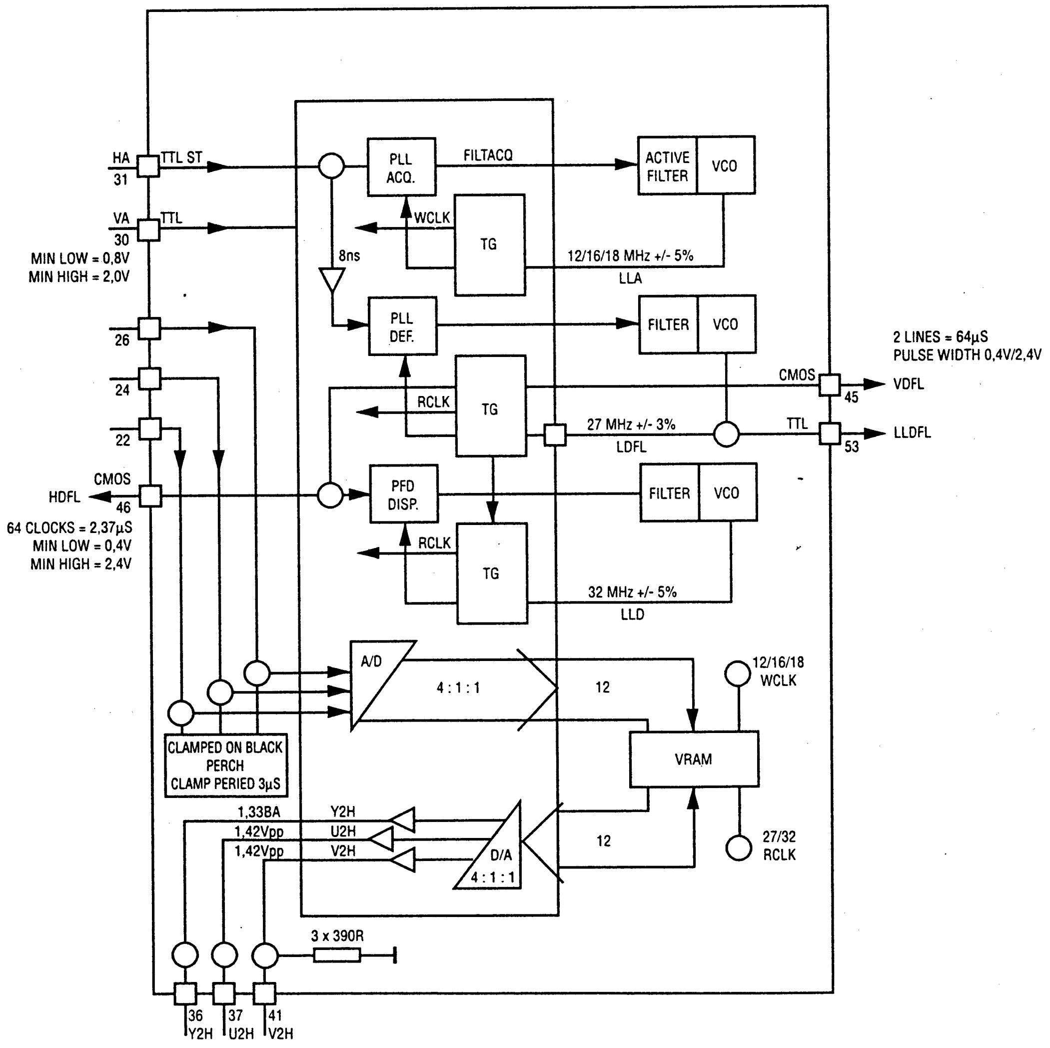

# ALLGEMEINE INFORMATIONEN - LED VERHALTEN

LED BLINKZEICHEN

Übermittlung von Informationen
Die Fehler-Codes werden von der roten LED angezeigt.

Zählen Sie die Leuchtimpulse: Sie werden in zwei Blinkfolgen, abgetrennt durch eine Pause von 0,7 sek., eingeteilt und verschiedene Male wiederholt. Zwischen jeweils zwei Codes ist eine Pause von 1,7 sek.

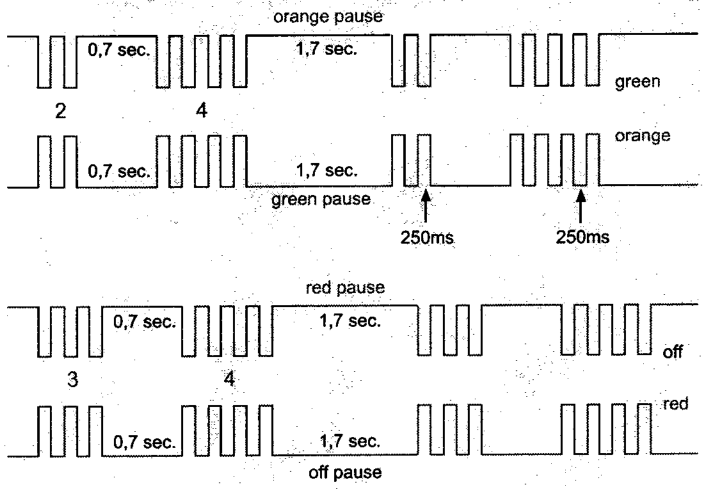


| CODES | FEHLER |
|---|---|
| 11 | Audio MSP Prozessor antwortet nicht. |
| 12 | Zweiter Audio MSP Prozessor antwortet nicht.(Dolby) |
| 13 | Audio DSP Prozessor antwortet nicht. (Dolby) |
| 14 | IC STV2161/62 antwortet nicht |
| 15 | IC STV2151 / TDA9143 antwortet nicht |
| 16 | DMU0 Upconverter (Videomodul) antwortet nicht |
| 17 | Audio- oder Dolby-modul nicht erkannt |
| 18 | TEA6415C antwortet nicht (SCAR T Schalter) |
| 19 | Tuner CTT5000 antwortet nicht |
| 21 | I2C Bus1 data line ist auf low |
| 22 | I2C Bus2 data line ist auf low |
| 23 | I2C Bus1 clock line ist auf low |
| 24 | I2C Bus2 clock line ist auf low |
| 25 | Geschaltete 5V nicht vorhanden |
| 26 | Röhre wird nicht rechtzeitig warm |
| 27 | Ablenkung meldet 3 mal Fehler. (Problem auf Breathing Leitung) |
| 29 | DRAM des Megatext defekt |
| 31 | RAM antwortet nicht |
| 32 | Ein software-timer wurde angefordert,ist aber noch nicht bereit |
| 33 | STV 2165 (PSI 100Hz) antwortet nicht |
| 34 | NVM Chip antwortet nicht (X24C32) |
| 35 | +13V nicht vorhanden |
| 36 | NVM adresse nicht gefunden |
| 37 | Unerwarteter Zustand an NMI (Interrupt) line gefunden. (Mögliche Ursache = Röhren-Überschlag") |
| 38 | M3L Bus des Megatext blockiert |
| 39 | Megatext (SDA 5273) antwortet nicht |
| 41 | Bus1 (data line) nicht möglich zu reaktivieren |
| 42 | Bus2 (data line) nicht möglich zu reaktivieren |
| 43 | MCU (Motion Mastering Up-Converter) antwortet nicht |
| 44 | Konvergenz IC (STV2040) antwortet nicht |
| 45 | falsches V ideomodul (falscher MCU) |
| 46 | NVRAM für Konvergenz antwortet nicht |
| 47 | Bildmuster im Konvergenz-IC ist defekt |
| 48 | Bildmuster aus dem NVRAM ist defekt |
| 49 | Bildrohrtyp "R" ist eigestellt, aber kein Konvergenz-IC gefunden |
| 51 | PIP antwortet nicht |
| 52 | Falsches Videotextmodul. |

# ALLGEMEINE INFORMATIONEN

## VORGEHENSWEISE

### 1 - BEIM EINSCHALTEN

Beobachten Sie das Verhalten der 2-farbigen LED: Merken Sie sich das Einschalt- verhalten und vergleichen es mit den normalen Zyklen.
Hierdurch kann die Zeit bis der Fehlerzeitpunkt und die zu überprüfende Stufe festgestellt werden.

### 2 - TROUBLE SHOOTING ABLAUF: LED-VERHALTEN

In bestimmten Fällen leuchtet die LED zum Übertragen einer Fehlerinformation auf:
LED Aufleuchten: Übertragung der Fehlerinformation
Zählen der Fehlerinformation: Kodiert in zwei Impulsbündeln, unterbrochen durch 0,7 s Pause.
Dieses wiederholt sich mehrere Male.

Sehen Sie in der Fehlercodetabelle

Diese Informationen sind genauer als Farbänderungen aber unvollständig, da verschiedene Ursachen denselben Code verursachen.

HINWEIS:
Im Service Mode ist es möglich die letzten Fehler-Codes aufzurufen, die sich in dem Fernsehgerät ereignet haben.

### 3 - FEHLERSUCHE

Funktionen der Stufen 1 und 2: Messungen mit dem Oszilloskop sind für die beiden separaten Vorgänge durchzuführen.

a - Das Gerät arbeitet ganz oder teilweise:
- Benutzen Sie die LED Informationen der Fehlersuchmethode 1 und 2.
Schauen Sie ebenfalls bei Fehlersuche nach Symptomen nach.

b - Das Fernsehgerät schaltet permanent oder periodisch ab:
- Beobachten Sie das LED-Verhalten (rotes Aufleuchten, konstantes orange gefolgt von Aufleuchten, usw.)
Wählen Sie das zutreffende Kästchen in der Spalte: Fehlersuche durch LED-Verhalten.

### INFORMATIONEN

Fernsehgeräte mit dem Chassis ICC19 arbeiten teilweise auch ohne die Module DVT, Sound, CRT, Chroma (50Hz) und VM Video (100Hz).

Dieser Punkt kann hilfreich sein wenn das Videomodul das Gerät in den Schutz-Mode schaltet.

Sehen Sie in die Geräte Konfigurationstabelle

# GENERAL INFORMATION - LED BEHAVIOUR

**LED FLASHES**

Message transmission.
The Error codes are signalled by the RED Standby LED.

Count number of flashes : error code is signalled in two burst separated by a 0.7 s pause and repeated several times.
There is 1.7 s between each code sequence .

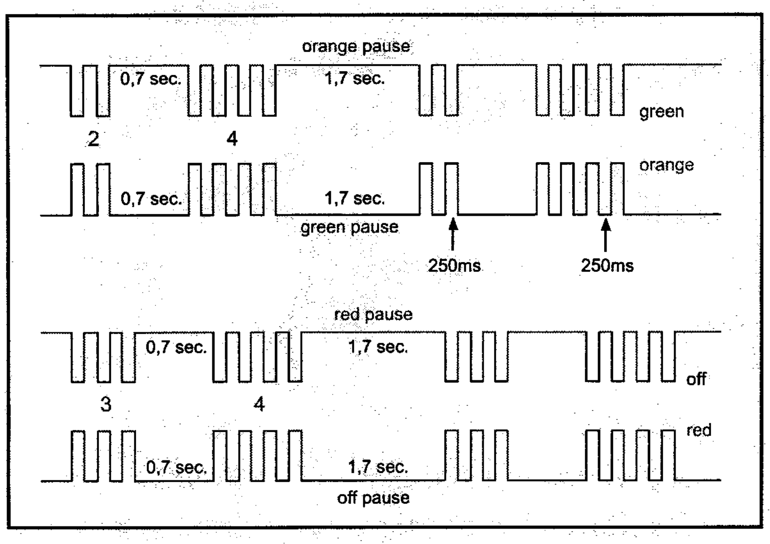


| CODES | DEFAUT |
|---|---|
| 11 | 1st Audio_MSP doesn't answer |
| 12 | 2nd Audio-MSP doesn't answer |
| 13 | Audio-DSP doesn't answer |
| 14 | Video IC STV2161/2 doesn't answer |
| 15 | Chroma IC 2151/9143 doesn't answer |
| 16 | Upconverter DMU0 doesn't answer |
| 17 | Audio ( or Dolby) module not detected |
| 18 | SCART IC TEA6415C doesn't answer |
| 19 | Tuner CTT5000 doesn't answer |
| 21 | I2C Bus1 data line held low |
| 22 | I2C Bus2 data line held low |
| 23 | I2C Bus1 clock line held low |
| 24 | I2C Bus2 clock line held low |
| 25 | Switched 5V not available |
| 26 | Tube doesn't get warm in time |
| 27 | Deflection detects >3 times protection (problem detected on "breathing" line) |
| 29 | DRAM memory of Megatext defect |
| 31 | RAM is full |
| 32 | A Software-timer has been requested, bus is not available yet |
| 33 | The PSI chip (STV2165) doesn't answer |
| 34 | The NVM (X24C32) chip doesnt answer |
| 35 | 13V not available |
| 36 | Wrong addr. NVRAM passed to the bus-handler |
| 37 | Unexpected level on NMI (Interrupt) line found (possible cause : tube flashover) |
| 38 | M3LBus for Megatext is blocked |
| 39 | Megatext (SDA5273) doesn't answer |
| 41 | bus1 Data line not recoverable |
| 42 | bus2 Data line not recoverable |
| 43 | MCU (Motion Mastering Up-Converter) doesn't answer |
| 44 | Convergence IC (STV2040) doesn't answer |
| 45 | Defect "Video Module" is detected |
| 46 | "Default" NVRAM of DCU doesn't answer |
| 47 | Test Pattern chip of DCU defect |
| 48 | Test Pattern NVRAM convergence chip defect |
| 49 | Convergence module doesn't answer anymore |
| 51 | PIP Module doesn't answer |
| 52 | The Teletext module is not conform. |

# GENERAL INFORMATION

## METHODOLOGY

**1 - SWITCHING "ON" THE TV :**

- Observe the behaviour of the two-coloured LED: note the various stages and compare them with the normal cycle of events.

By watching this, the point at which the problem arises and the part of the circuit which needs to be investigated can be identified.

**2 -TROUBLE SHOOTING PROCEDURE: LED BEHAVIOUR**

In certain cases a flashing LED signifies the transmission of an error code message:

LED flashes : message transmission.

Count the flashes : coded into two bursts separated by a pause of 0.7 s and repeated several times.

See the error code table.

This data is more precise than LED colour changes, however, since various fault conditions generate the same error code the information signalled may be imcomplete.

Please Note :
In the service mode, it is possible to consult a record of the last error codes which have occurred in the television set.

**3 - FAULT FINDING :**

Operation stages 1 and 2: an oscilloscope test is carried out according to two separate processes.

**a - The television set operates fully or partially**
- Use LED message observation fault finding methods 1 and 2. See also the fault related to fault finding by symptom.

**b - The television set goes into permanent or cyclical security mode**
- Observe LED behaviour (flashing red, stable orange followed by flashing, etc.).

Select the relevant box in the column (LED behaviour fault finding).

## INFORMATION

The ICC19 television will partially operate without the DVT, SOUND, CRT, CHROMA (50 Hz) and VM video (100 Hz) modules remoded.
This point may be useful if the video module causes the TV to switch to security mode.

See the television configuration table.

[*pr76Y

# FEHLERSUCHE IM RPC19

> ⚠ - Achtung! Jede der vorgeschlagenen Manipulationen muß bei abgeschaltetem Gerät durchgeführt werden (Hauptnetzschalter aus).
> Alle Arbeiten, die bei eingeschaltetem Gerät durchgeführt werden, können Bauteile zerstören!
> - Einen Trenntrafo verwenden.

**Überprüfung der digitalen konvergenzeinheit**

- Der IC sollte eine ordnungsgemäße 5 V-Versorgung besitzen.
- PWAT Pin 26 von IK01 muß >+4 V sein, andernfalls bleibt der IC im Reset.
- Die +-15 V-Versorgung von PS muß anliegen und >13 V sein.
- H- und V-Synchronisierung müssen an Pin 22 und Pin 55 von IK01 anliegen
- Am Pin 40 (REFO) muß +1 V anliegen.
- An den Pins DABV, DAGV und DARV (43, 44 und 45) von IK01 muß +1 V anliegen.
- An den Pins DABH, DAGH und DARH (49 und 50) von IK01 muß +1 V anliegen.
- An Pin 14 (ECLK) von IK01 muß ein 8,5 MHz-Takt anliegen.

**Überprüfen des Konvergenznetzeiles**

Arbeiten an einem defekten Gerät sind nur mit einem **Trenn netztransformator** zulässig.
Wenn kein Konvergenzbild am Bildschirm angezeit wird, so können Sie das Konvergenznetzteil für sich prüfen.

Führen Sie folgende Schritte durch:

1. Netz ausschalten.
2. Die Verbindung von BP260 zwischen der DCU-Platine und der Konvergenz-Spannungsquelle abziehen.
3. Einen Widerstand von 270R/10W zwischen +15 V und - 15 V anschließen (zum Beispiel zwischen die Kathode von DP267 und der Anode von DP265).
4. Den Kollektor und den Emitter von TP238 miteinander verbinden.
5. Netz einschalten.

| Name / Position | DC-Wert(V) |
|---|---|
| CP210 | 298,0 |
| DP213 | 33,2 |
| CP240 | 16,9 |
| CP243 | -25,4 |
| CP233 | 15,3 |
| Pin 5 von IP250 | 30,3 |
| Pin 4 von IP250 | 0,0 |
| Kollektor von TP233 | 0,9 |
| CP268 | 14,9 |
| CP266 | -14,9 |
| CP262 | 58,7 |
| CP264 | 57,9 |
| CP271 | 0,0 |
| DCU_SAFE | 0,0 |
| RP271 | 0,0 |
| Pin 1 von TP250 | 0,0 |
| CP210 | 298,0 |

# TROUBLESHOOTING RP C19

> - All of the following tests must be carried out with the MAINS switched OFF.
>
> Any operations carried out with the MAINS switched ON may lead to components being destroyed.
> - Use isolating mains transformer.

## DIGITAL CONVERGENCE UNIT CHECK

- IC should have correct +5V supply
- PWAT pin 26 of IK01 must be >+4V otherwise the IC is kept in reset.
- The + - 15V from the PS must be present and >13V
- H and V sync must be present pin nr. 22 and 55 of IK01
- at the pin REFO nr. 40 + 1V must be present.
- at the pins DABV, DAGV, DARV, nr.43, 44and 45 of IK01 +1V must be present
- at the pins DABH, DAGH, DARH nr.48, 49 and 50 of IK01 +1V must be present
- at the pin ECLK nr. 14 of IK01 a 8.5Mhz clock must be present

## DIGITAL CONVERGENCE UNIT POWER SUPPLY TROUBLESHOOTING

If you have not a convergence picture on the screen it's possible to check the convergence power supply for itself.

Do the following steps.

1. Switch off the mains
2. Remove the connection of BP260 between the DCU board and the convergence power supply
3. Connect a resistor of 270R/10W between +15V and -15V. For examplee cathode of DP267 and anode of DP265.
4. Make a short circuit between collector and emitter of TP 238.
5. Switch on the mains.

| Name / Position | DC value / V |
|---|---|
| CP210 | 298.0 |
| DP213 | 33.2 |
| CP240 | 16.9 |
| CP243 | -25.4 |
| CP233 | 15.3 |
| Pin 5 of IP250 | 30.3 |
| Pin 4 of IP250 | 0.0 |
| Collector of TP233 | 0.9 |
| CP268 | 14.9 |
| CP266 | -14.9 |
| CP262 | 58.7 |
| CP264 | 57.9 |
| CP271 | 0.0 |
| DCU_SAFE | 0.0 |
| RP271 | 0.0 |
| Pin 1 of TP250 | 0.0 |
| CP210 | 298.0 |

# ÜBERPRÜFEN DER STROMVERSORGUNG UND AUFFINDEN EINES SCHUTZSCHALTUNGSFEHLERS

⚠ Achtung! Jede der vorgeschlagenen Manipulationen muß bei abgeschaltetem Gerät durchgeführt werden (Hauptnetzschalter aus).

Alle Arbeiten, die bei eingeschaltetem Gerät durchgeführt werden, können Bauteile zerstören!

Für die Analyse von Schutzschaltungsproblemen kann folgende Konfiguration verwendet werden.
In diesem Zustand arbeitet die Stromversorgung in normalem Regelzyklus, jedoch ohne Ablenkung und ohne Schutzschaltungsinformationen, damit der Grund für Probleme gefunden werden kann.

- Haupschalter aus
- CP170 Kurzschluß (K/6)*
- JL010 entfernen (M8)* oder Pin6 von LL08 ablöten
- Widerstand 75 Ohm (4W) zwischen +Vs und -Vs löten (L,M/4-5)*

↓

- Gerät eingeschaltet: Mit folgender Konfiguration gemessen

↓

| U Syst : | 50 Hz 131V | 50Hz 132 | 50Hz 137V | 100Hz 134V | 100 Hz 137V | 100 Hz 140V |
|---|---|---|---|---|---|---|
| **Usyst** (P/5)* (V+/-5V) | 131.5 | 133 | 138 | 134.3 | 141 | 140 |
| **U vert** / CP130 ( P/4)* (V) | 13 | 14.2 | 14.2 | 12.7 | 12.8 | 11.8 |
| **+Us / -Us** (L/5-4)* (V) | 6.4 | 6.4 | 6.4 | 8 | 8.3 | 6 |
| **7V** / CP140 (J/3-4)* (V) | 4.3 | 8.6 | 8.6 | 6.8 | 7.4 | 6.4 |
| **10V SBY**/ K DP133 (N/5)* (V) | 10.6 | 11.2 | 11.2 | 10.2 | 10.4 | 9.3 |
| **Vcc1** / 44-IV001 (J/7)* (V) | 7.8 | 7.9 | 7.9 | 7.9 | 7.9 | 7.8 |
| **UVFB** / K DL043 (K/8)* (V) | 13.3 | 14.5 | 14.5 | 12.7 | 12.8 | 11.1 |
| **13V** / CL042 (J/8)* (V) | 0 | 0 | 0 | 0 | 0 | 0 |
| **200V** / CL046 (P/6)* (V) | 0 | 0 | 0 | 0 | 0 | 1.1 |
| **5V** / CP143 (H/3)* (V) | 0 | 0 | 0 | 0 | 0 | 0.2 |

(*) Lage des Bauelements

Schaltbild nur von der Schutzschaltung.

# POWER SUPPLY CHECK AND FIND «PROT» FAILURE

⚠ All of the following tests must be carried out with the MAINS switched OFF.

Any operations carried out with the MAINS switched ON may lead to components being destroyed.

to analyse a «PROT» fault condition it is possible to use the following test configuration.
In this configuration the power supply will be working with its normal regulation loop, the deflection stage and any "PROT" information is disabled in order to locate the cause of the problem.

- MAINS switched «OFF»
- CP170 short-circuited (K/6)*
- JL010 removed (M/8)* or desolder Pin 6 of DST (LL08)
- Connect a R= 75 Ohms (4W) between +Vs and -Vs (L-M/4-5)*

↓

- Switch «ON» TV : Measure the following voltages.

↓

| U Syst : | 50 Hz 131V | 50Hz 132 | 50Hz 137V | 100Hz 134V | 100 Hz 137V | 100 Hz 140V |
|---|---|---|---|---|---|---|
| **Usyst** (P/5)* (V+/-5V) | 131.5 | 133 | 138 | 134.3 | 141 | 140 |
| **U vert** / CP130 ( P/4)* (V) | 13 | 14.2 | 14.2 | 12.7 | 12.8 | 11.8 |
| **+Us / -Us** (L/5-4)* (V) | 6.4 | 6.4 | 6.4 | 8 | 8.3 | 6 |
| **7V** / CP140 (J/3-4)* (V) | 4.3 | 8.6 | 8.6 | 6.8 | 7.4 | 6.4 |
| **10V SBY**/ K DP133 (N/5)* (V) | 10.6 | 11.2 | 11.2 | 10.2 | 10.4 | 9.3 |
| **Vcc1** / 44-IV001 (J/7)* (V) | 7.8 | 7.9 | 7.9 | 7.9 | 7.9 | 7.8 |
| **UVFB** / K DL043 (K/8)* (V) | 13.3 | 14.5 | 14.5 | 12.7 | 12.8 | 11.1 |
| **13V** / CL042 (J/8)* (V) | 0 | 0 | 0 | 0 | 0 | 0 |
| **200V** / CL046 (P/6)* (V) | 0 | 0 | 0 | 0 | 0 | 1.1 |
| **5V** / CP143 (H/3)* (V) | 0 | 0 | 0 | 0 | 0 | 0.2 |

(*) Components location

safety circuit block diagram only

# ALLGEMEINE INFORMATIONEN

## VORGEHENSWEISE

### 1 - BEIM EINSCHALTEN

Beobachten Sie das Verhalten der 2-farbigen LED: Merken Sie sich das Einschalt- verhalten und vergleichen es mit den normalen Zyklen.
Hierdurch kann die Zeit bis der Fehlerzeitpunkt und die zu überprüfende Stufe festgestellt werden.

### 2 - TROUBLE SHOOTING ABLAUF: LED-VERHALTEN

In bestimmten Fällen leuchtet die LED zum Übertragen einer Fehlerinformation auf:
LED Aufleuchten: Übertragung der Fehlerinformation
Zählen der Fehlerinformation: Kodiert in zwei Impulsbündeln, unterbrochen durch 0,7 s Pause.
Dieses wiederholt sich mehrere Male.

Sehen Sie in der Fehlercodetabelle

Diese Informationen sind genauer als Farbänderungen aber unvollständig, da verschiedene Ursachen denselben Code verursachen.

HINWEIS:
Im Service Mode ist es möglich die letzten Fehler-Codes aufzurufen, die sich in dem Fernsehgerät ereignet haben.

### 3 - FEHLERSUCHE

Funktionen der Stufen 1 und 2: Messungen mit dem Oszilloskop sind für die beiden separaten Vorgänge durchzuführen.

a - Das Gerät arbeitet ganz oder teilweise:
- Benutzen Sie die LED Informationen der Fehlersuchmethode 1 und 2.
Schauen Sie ebenfalls bei Fehlersuche nach Symptomen nach.

b - Das Fernsehgerät schaltet permanent oder periodisch ab:
- Beobachten Sie das LED-Verhalten (rotes Aufleuchten, konstantes orange gefolgt von Aufleuchten, usw.)
Wählen Sie das zutreffende Kästchen in der Spalte: Fehlersuche durch LED-Verhalten.

## INFORMATIONEN

Fernsehgeräte mit dem Chassis ICC19 arbeiten teilweise auch ohne die Module DVT, Sound, CRT, Chroma (50Hz) und VM Video (100Hz).

Dieser Punkt kann hilfreich sein wenn das Videomodul das Gerät in den Schutz-Mode schaltet.

Sehen Sie in die Geräte Konfigurationstabelle

## BEHAVIOUR OF ICC19 WITHOUT CERTAIN MODULES ARE FITTED OR REMOVED

| CONFIGURATION | | | | ERROR CODE | ALL VOLTAGES | Signal at pin 19 BV011 | Signal at pin 2-4-6 BV001 | picture |
|---|---|---|---|---|---|---|---|---|
| VM | AM-FM | DVT | CRT | | | | | |
| without | without | without | without (1) | 17 | ok (1) | no | no | no |
| with | without | without | without (1) | 17 | ok (1) | no | no | no |
| with | with | without | without (1) | 39 | ok (1) | no | no | no |
| with | with | with | without (1) | 26 | ok (1) | ok | no | no |
| with | without | with | with | 17 | ok | ok | ok | ok |
| with | with | without | with | 39 | ok | ok | ok | ok (2) |
| without | with | with | with | 15 | ok | noise | pulse 100Hz | no |

(1) : If the CRT is not connected, the voltage across CL046 will increase up to 250V instead 202V, this is due to the lack of a discharge path. Before to reconnecting BL050 and BP110 it is **imperative to discharge** CL046 with a resitor (22k or 33k).

(2) : In this case, the picture will only be visible after 1mn.

## VERHALTEN DES CHASSIS ICC19 MIT EINZELNEN GEZOGENEN MODULEN ODER KOMPLETT OHNE MODULE

| KONFIGURATION | | | | FEHLER CODE | ALLE SPANNUNGEN | Signal an Pin 19 BV011 | Signal an Pin 2-4-6 BV001 | Bild |
|---|---|---|---|---|---|---|---|---|
| VM | AM-FM | DVT | CRT | | | | | |
| ohne | ohne | ohne | ohne (1) | 17 | ok (1) | nein | nein | nein |
| mit | mit | ohne | ohne (1) | 17 | ok (1) | nein | nein | nein |
| mit | mit | ohne | ohne(1) | 39 | ok (1) | nein | nein | nein |
| mit | mit | mit | ohne (1) | 26 | ok (1) | ok | nein | nein |
| mit | ohne | mit | mit | 17 | ok | ok | ok | ok |
| mit | mit | ohne | mit | 39 | ok | ok | ok | ok (2) |
| ohne | mit | mit | mit | 15 | ok | Rauschen | Frequenz.100Hz | nein |

(1) : Wenn das CRT Modul nicht angeschlossen ist, erhöht sich die Spannung an CL046 auf über 250V anstatt 202V. Der Kondensator wird nicht entladen. Bevor Sie BL050 und BP110 wieder anschließen, muß CL046 unbedingt mit einem Widerstand (22k oder 33k) entladen werden.
(2) : In diesem Fall wird das Bild nach 1 Min sichtbar.

## ICC19 100 Hz - BASIC- / IM- / MM- SCENIUM Version

| tube name | description | CT-Part | | DST | Usys jumper | Usys | Version |
|---|---|---|---|---|---|---|---|
| A66EGW 48X322 | 4/3 28”MP INVAR BSVM | CT 19101 34 | 10362880 | 10460360 | JP915 | 134V | ICC19 IM |
| | | CT 19105 37 | 10351530 | 10468070 | JP914 | 137V | ICC19 IM |
| A59EGD048X322 | 4/3 25”SF INVAR BSVM | CT 19105 37 | 10351530 | 10468070 | JP914 | 137V | ICC19 IM |
| A68EGD038X322 | 4/3 29”SF INVAR BSVM | CT 19105 37 | 10351530 | 10468070 | JP914 | 137V | ICC19 IM |
| | | CT 19152 37 | 10520610 | 10510870 | JP914 | 137V | ICC19 MM |
| A66EHJ 48X 12 | 4/3 28”MP AK; no BSVM | CT 19103 34 | 10556010 | 10551170 | JP915 | 134V | ICC19 BASIC |
| A68EGV038X322 | 4/3 29”SF SS INVAR BSVM | CT 19155 37 | 10562010 | 10551150 | JP914 | 137V | ICC19 IM/MM |
| A80AJA 16X120 | 4/3 33”MP INVAR BSVM | CT 19156 37 | 10561990 | 10510870 | JP914 | 137V | ICC19 IM |
| A80EJA 16X122 | 4/3 33”MP INVAR BSVM | CT 19156 37 | 10561990 | 10510870 | JP914 | 137V | ICC19 IM |
| A90AFX 16X120 | 4/3 37”MP INVAR BSVM | CT 19156 37 | 10561990 | 10510870 | JP914 | 137V | ICC19 IM |
| W66EGV023X122 | 16/9 28”SF INVAR BSVM | CT 19111 34 | 10444810 | 10468160 | JP915 | 134V | ICC19 IM |
| W76EGV023X122 | 16/9 32”SF INVAR BSVM | CT 19111 34 | 10444810 | 10468160 | JP915 | 134V | ICC19 IM |
| W76EGX023X122 | 16/9 32”SF INVAR BSVM | CT 19151 34 | 10520600 | 10520330 | JP915 | 134V | ICC19 MM |
| W66EGV023X122 | 16/9 28"SF INVAR BSVM | CT 19251 40 | 10578550 | 10576740 | JP917 | 140V | ICC19 MM + IM + PVM (PANORAMA) |
| W76EGX023X122 | 16/9 32"SF INVAR BSVM | CT 19251 40 | 10578550 | 10576740 | JP917 | 140V | |
| W76EGV023X122 | 16/9 32"SF INVAR BSVM | CT 19251 40 | 10578550 | 10576740 | JP917 | 140V | |
| W76EGV023X878 | 16/9 32"SF INVAR BSVM | CT 19251 40 | 10578550 | 10576740 | JP917 | 140V | |
| W66LPQ356X99 | 16/9 28"SF INVAR BSVM | CT 19551 40 | 10604230 | 10647440 | JP917 | 140V | SCENIUM XF TUBE |
| W76LPF350X97 | 16/9 32"SF INVAR BSVM | CT 19551 40 | 10604230 | 10647440 | JP917 | 140V | |

## RP C19

| tube name | description | CT-Part | | DST | Usys jumper | Usys | Version |
|---|---|---|---|---|---|---|---|
| RP - 4/3 | 4/3 46” - 52” | CT 19400 34 | 10530110 | 10521310 | JP915 | 134V | RP C19 4/3 |
| RP - 16/9 | 16/9 52” | CT 19450 34 | 10615440 | 10641600 | JP915 | 134V | RP C19 16/9 |

## ICC19 50 Hz

| tube name | description | CT-Part | | DST | Usys jumper | Usys | Version |
|---|---|---|---|---|---|---|---|
| A59EGD048X300 | 4/3 25"SF | CT 19005 31 | 10510890 | 10517720 | JP915 | 131V | |
| A66ECY13X15 | 4/3 28"MP | CT 19003 32 | 10351520 | 10517740 | JP914 | 132V | |
| A66EHJ 13X 15 | 4/3 28"MP AK | CT 19003 32 | 10351520 | 10517740 | JP914 | 132V | |
| A68EGD038X300 | 4/3 29"SF | CT 19005 31 | 10510890 | 10517720 | JP915 | 131V | |
| A80AEJ15X01 | 4/3 33"MP | CT19006 31 | 10351840 | 10517720 | JP915 | 131V | |
| W66EGV023X115 | 16/9 28"SF | CT 19032 37 | 10391010 | 10517750 | JP917 | 137V | |
| W76EGX023X115 | 16/9 32"SF | CT 19032 37 | 10391010 | 10517750 | JP917 | 137V | |

b16WÄü

U SYS . / REFERENCE TUBE

CONTROLES DES CIRCUITS DE DEVIATION LIGNE

CONTROLES DES CIRCUITS DE DEVIATION TRAME

## ICC19 100 Hz - BASIC- / IM- / MM- SCENIUM Version

| tube name | description | CT-Part | | DST | Usys jumper | Usys | Version |
|---|---|---|---|---|---|---|---|
| A66EGW 48X322 | 4/3 28"MP INVAR BSVM | CT 19101 34 | 10362880 | 10460360 | JP915 | 134V | ICC19 IM |
| | | CT 19105 37 | 10351530 | 10468070 | JP914 | 137V | ICC19 IM |
| A59EGD048X322 | 4/3 25"SF INVAR BSVM | CT 19105 37 | 10351530 | 10468070 | JP914 | 137V | ICC19 IM |
| A68EGD038X322 | 4/3 29"SF INVAR BSVM | CT 19105 37 | 10351530 | 10468070 | JP914 | 137V | ICC19 IM |
| | | CT 19152 37 | 10520610 | 10510870 | JP914 | 137V | ICC19 MM |
| A66EHJ 48X 12 | 4/3 28"MP AK; no BSVM | CT 19103 34 | 10556010 | 10551170 | JP915 | 134V | ICC19 BASIC |
| A68EGV038X322 | 4/3 29"SF SS INVAR BSVM | CT 19155 37 | 10562010 | 10551150 | JP914 | 137V | ICC19 IM/MM |
| A80AJA 16X120 | 4/3 33"MP INVAR BSVM | CT 19156 37 | 10561990 | 10510870 | JP914 | 137V | ICC19 IM |
| A80EJA 16X122 | 4/3 33"MP INVAR BSVM | CT 19156 37 | 10561990 | 10510870 | JP914 | 137V | ICC19 IM |
| A90AFX 16X120 | 4/3 37"MP INVAR BSVM | CT 19156 37 | 10561990 | 10510870 | JP914 | 137V | ICC19 IM |
| W66EGV023X122 | 16/9 28"SF INVAR BSVM | CT 19111 34 | 10444810 | 10468160 | JP915 | 134V | ICC19 IM |
| W76EGV023X122 | 16/9 32"SF INVAR BSVM | CT 19111 34 | 10444810 | 10468160 | JP915 | 134V | ICC19 IM |
| W76EGX023X122 | 16/9 32"SF INVAR BSVM | CT 19151 34 | 10520600 | 10520330 | JP915 | 134V | ICC19 MM |
| W66EGV023X122 | 16/9 28"SF INVAR BSVM | CT 19251 40 | 10578550 | 10576740 | JP917 | 140V | ICC19 MM + IM + PVM (PANORAMA) |
| W76EGX023X122 | 16/9 32"SF INVAR BSVM | CT 19251 40 | 10578550 | 10576740 | JP917 | 140V | |
| W76EGV023X122 | 16/9 32"SF INVAR BSVM | CT 19251 40 | 10578550 | 10576740 | JP917 | 140V | |
| W76EGV023X878 | 16/9 32"SF INVAR BSVM | CT 19251 40 | 10578550 | 10576740 | JP917 | 140V | |
| W66LPQ356X99 | 16/9 28"SF INVAR BSVM | CT 19551 40 | 10604230 | 10647440 | JP917 | 140V | SCENIUM XF TUBE |
| W76LPF350X97 | 16/9 32"SF INVAR BSVM | CT 19551 40 | 10604230 | 10647440 | JP917 | 140V | |

## RP C19

| tube name | description | CT-Part | | DST | Usys jumper | Usys | Version |
|---|---|---|---|---|---|---|---|
| RP - 4/3 | 4/3 46" - 52" | CT 19400 34 | 10530110 | 10521310 | JP915 | 134V | RP C19 4/3 |
| RP - 16/9 | 16/9 52" | CT 19450 34 | 10615440 | 10641600 | JP915 | 134V | RP C19 16/9 |

## ICC19 50 Hz

| tube name | description | CT-Part | | DST | Usys jumper | Usys | Version |
|---|---|---|---|---|---|---|---|
| A59EGD048X300 | 4/3 25"SF | CT 19005 31 | 10510890 | 10517720 | JP915 | 131V | |
| A66ECY13X15 | 4/3 28"MP | CT 19003 32 | 10351520 | 10517740 | JP914 | 132V | |
| A66EHJ 13X 15 | 4/3 28"MP AK | CT 19003 32 | 10351520 | 10517740 | JP914 | 132V | |
| A68EGD038X300 | 4/3 29"SF | CT 19005 31 | 10510890 | 10517720 | JP915 | 131V | |
| A80AEJ15X01 | 4/3 33"MP | CT19006 31 | 10351840 | 10517720 | JP915 | 131V | |
| W66EGV023X115 | 16/9 28"SF | CT 19032 37 | 10391010 | 10517750 | JP917 | 137V | |
| W76EGX023X115 | 16/9 32"SF | CT 19032 37 | 10391010 | 10517750 | JP917 | 137V | |

# GENERAL INFORMATION

## METHODOLOGY

### 1 - SWITCHING "ON" THE TV :

- Observe the behaviour of the two-coloured LED: note the various stages and compare them with the normal cycle of events.
By watching this, the point at which the problem arises and the part of the circuit which needs to be investigated can be identified.

### 2 -TROUBLE SHOOTING PROCEDURE: LED BEHAVIOUR

In certain cases a flashing LED signifies the transmission of an error code message:

LED flashes : message transmission.

Count the flashes : coded into two bursts separated by a pause of 0.7 s and repeated several times.

See the error code table.

This data is more precise than LED colour changes, however, since various fault conditions generate the same error code the information signalled may be imcomplete.

Please Note :
In the service mode, it is possible to consult a record of the last error codes which have occurred in the television set.

### 3 - FAULT FINDING :

Operation stages 1 and 2: an oscilloscope test is carried out according to two separate processes.

**a - The television set operates fully or partially**
- Use LED message observation fault finding methods 1 and 2. See also the fault related to fault finding by symptom.

**b - The television set goes into permanent or cyclical security mode**
- Observe LED behaviour (flashing red, stable orange followed by flashing, etc.).
Select the relevant box in the column (LED behaviour fault finding).

## INFORMATION

The ICC19 television will partially operate without the DVT, SOUND, CRT, CHROMA (50 Hz) and VM video (100 Hz) modules remoded.
This point may be useful if the video module causes the TV to switch to security mode.

See the television configuration table.

## BEHAVIOUR OF ICC19 WITHOUT CERTAIN MODULES ARE FITTED OR REMOVED

| CONFIGURATION | | | | ERROR CODE | ALL VOLTAGES | Signal at pin 19 BV011 | Signal at pin 2-4-6 BV001 | picture |
|---|---|---|---|---|---|---|---|---|
| VM | AM-FM | DVT | CRT | | | | | |
| without | without | without | without (1) | 17 | ok (1) | no | no | no |
| with | without | without | without (1) | 17 | ok (1) | no | no | no |
| with | with | without | without (1) | 39 | ok (1) | no | no | no |
| with | with | with | without (1) | 26 | ok (1) | ok | no | no |
| with | without | with | with | 17 | ok | ok | ok | ok |
| with | with | without | with | 39 | ok | ok | ok | ok (2) |
| without | with | with | with | 15 | ok | noise | pulse 100Hz | no |

(1) : If the CRT is not connected, the voltage across CL046 will increase up to 250V instead 202V, this is due to the lack of a discharge path. Before to reconnecting BL050 and BP110 it is **imperative to discharge** CL046 with a resitor (22k or 33k).

(2) : In this case, the picture will only be visible after 1mn.

**SERVICE TIPS**

## ICC19 16/9 50 Hz CHASSIS
**32WS88KE - 28WS78KE - 32WS83KP - 28WS73KD**

## - ANSPRECHEN DER SCHUTZSCHALTUNG UND ABSCHALTEN DES NETZTEILS BEI VIDEOBETRIEB

**Ursache :**
Ansprechen der Synchronisationssignal während ein oder zwei Bilder (schlechte Qualität der Videocassette).

**Abhilfe :**
- Ersetzen sie den Kondensator CL067 100nF 100V durch einen 1µF 63V Bestell-Nr.: 43067772.
- Ergänzen Sie den Melf Widerstand RL066 220kΩ 5% 100mW, Bestell-Nr.: 10328700.

## FERNSEHGERÄTE MIT DEM CHASSIS ICC19 (50Hz, 100Hz)

### * PERMANENTE STÖRGERÄUSCHE AUS DEN LAUTSPRECHERN IM STAND-BY MODE
- CP120 von 470µF/35V gegen 330µF/25V austauschen (Bestell-Nr. 10448410).

### * AUSFALL DES IC TDA8177F IN POSITION IF001

**ACHTUNG**

**Es ist unbedingt darauf zu achten für das Chassis ICC19 das IC TDA8177F (Bestell-Nr. 10352880) zu verwenden. Dieses IC für höhere Lastströme ausgelegt als das IC TDA8177 (Bestell-Nr 15053440). Dieses IC wird in Geräten mit dem Chassis TX92 verwendet.**
**Im Falle einer Verwechselung fällt das IC nach dem Einschalten aus.**

## FERNSEHGERÄTE MIT DEM CHASSIS ICC19 100 Hz (STEREO ODER DOLBY STEREO)

## - MOIRE ODER SCHWARZE VERTIKALE BALKEN AUF DEM BILDSCHIRM VHF BAND I (NUR ITALIAN)

**Ursache :**
Übersprechen zwischen Netzteil und Tuner.

**Abhilfe :**
- Ersetzen Sie den Switch Mode Trafo LP020 durch eine neunen mit der TOCOM-Nr :
- 10553820 ( Stereo )
- 10553830 ( Dolby stereo ).

BETROFFENE GERÄTE/CHASSIS: ICC19 (100HZ)
28WS78M, 28WS78MP, 32WS88ME, 32WS98MP
(nur Geräte mit Serien-Nr. beginnend mit AK3025110)

**Symptom/Problem**:

## - ABHÄNGIG VON DER AUSRICHTUNG DES GERÄTES IM ERDMAGNETFELD IST EINE ROTATION DES BILDES MÖGLICH. DER EFFEKT IST BEI VIDEOTEXT ODER EINGEBLENDETEN UNTERTITELN BESON DERS SICHTBAR.

**Abhilfe:**
Abgleich der Erdfeldkorrektur. Der Einsteller (Poti) befindet sich auf der Erdfeldkorrekturplatine (EFC).
Sollte keine Erdfeldkorrekturplatine eingebaut sein, kann diese nachgerüstet werden (Best-Nr. 350 592 70).

## CRT BS 19200 - CRT BS 19201

COMPONENT SIDE - CÔTE COMPOSANTS - BESTÜCKUNGSSEITE - LATO COMPONENTI - LADO COMPONENTES

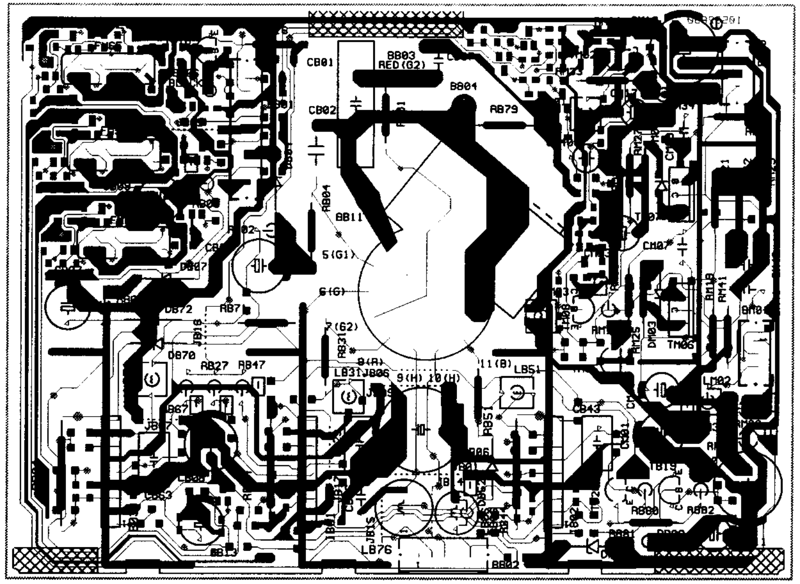

SOLDER SIDE - CÔTE SOUDURES - LÖTSEITE - LATO SALDATURE - LADO SOLDADURAS

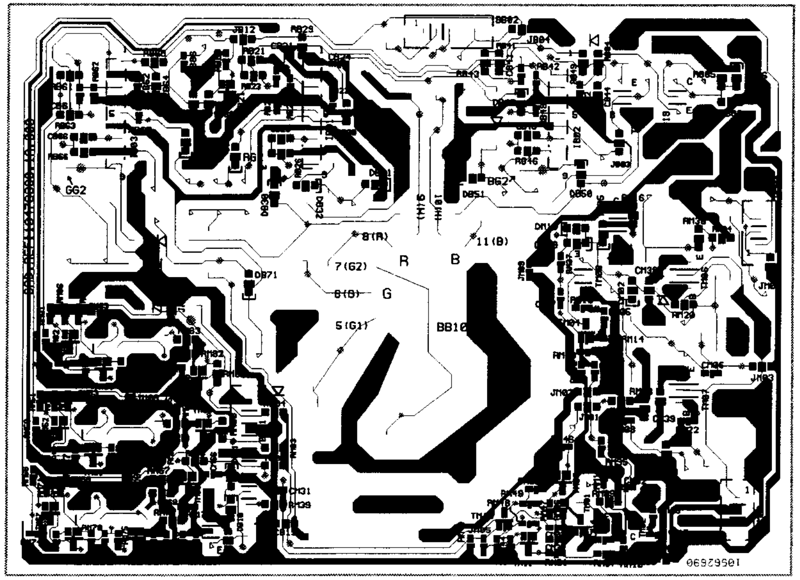

## CRT BS 19100 - CRT BS 19400

COMPONENT SIDE - CÔTE COMPOSANTS - BESTÜCKUNGSSEITE - LATO COMPONENTI - LADO COMPONENTES

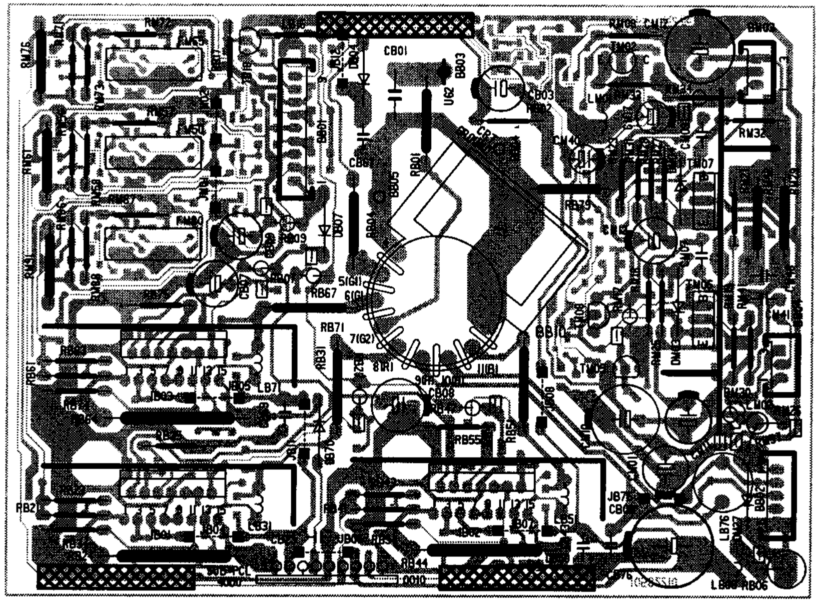

SOLDER SIDE - CÔTE SOUDURES - LÖTSEITE - LATO SALDATURE - LADO SOLDADURAS

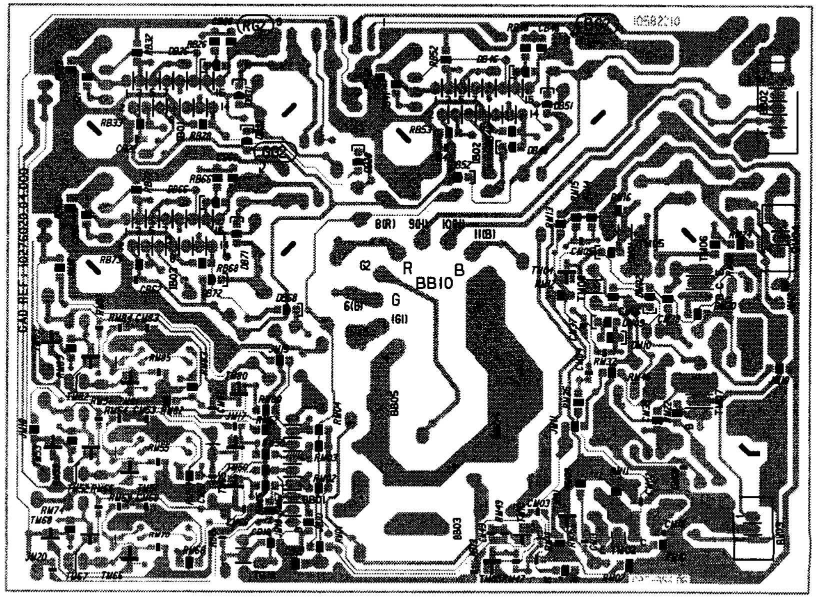

# CRT BS 19100 - CRT BS 19400

COMPONENT SIDE - CÔTE COMPOSANTS - BESTÜCKUNGSSEITE - LATO COMPONENTI - LADO COMPONENTES

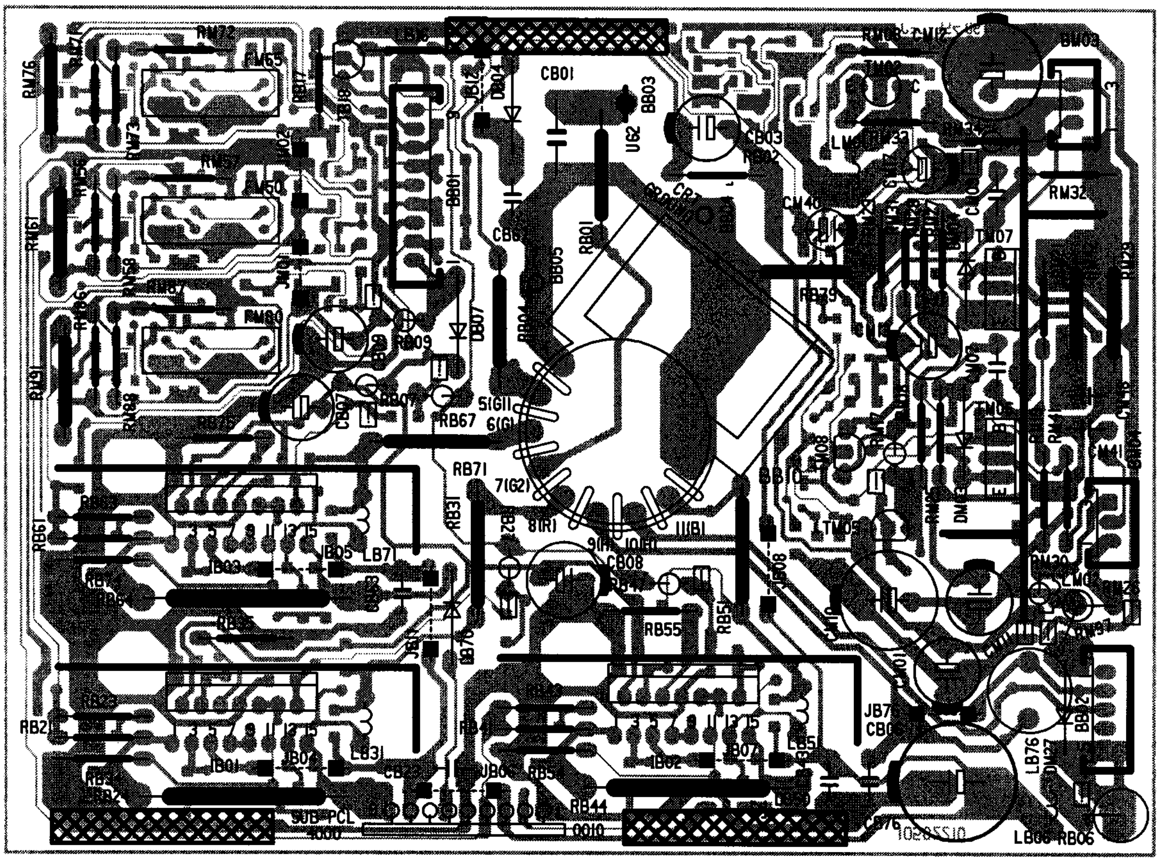

SOLDER SIDE - CÔTE SOUDURES - LÖTSEITE - LATO SALDATURE - LADO SOLDADURAS

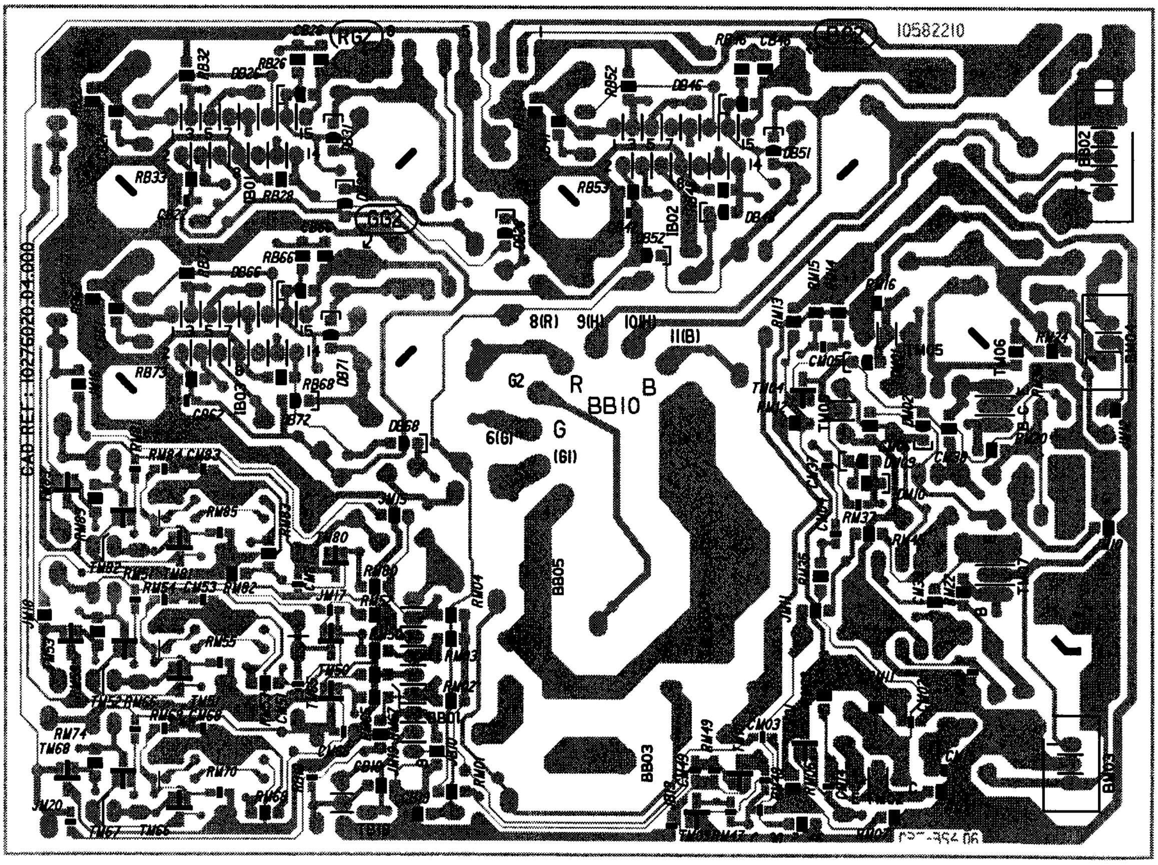

## CRT BS 19200 - CRT BS 19201

COMPONENT SIDE - CÔTE COMPOSANTS - BESTÜCKUNGSSEITE - LATO COMPONENTI - LADO COMPONENTES

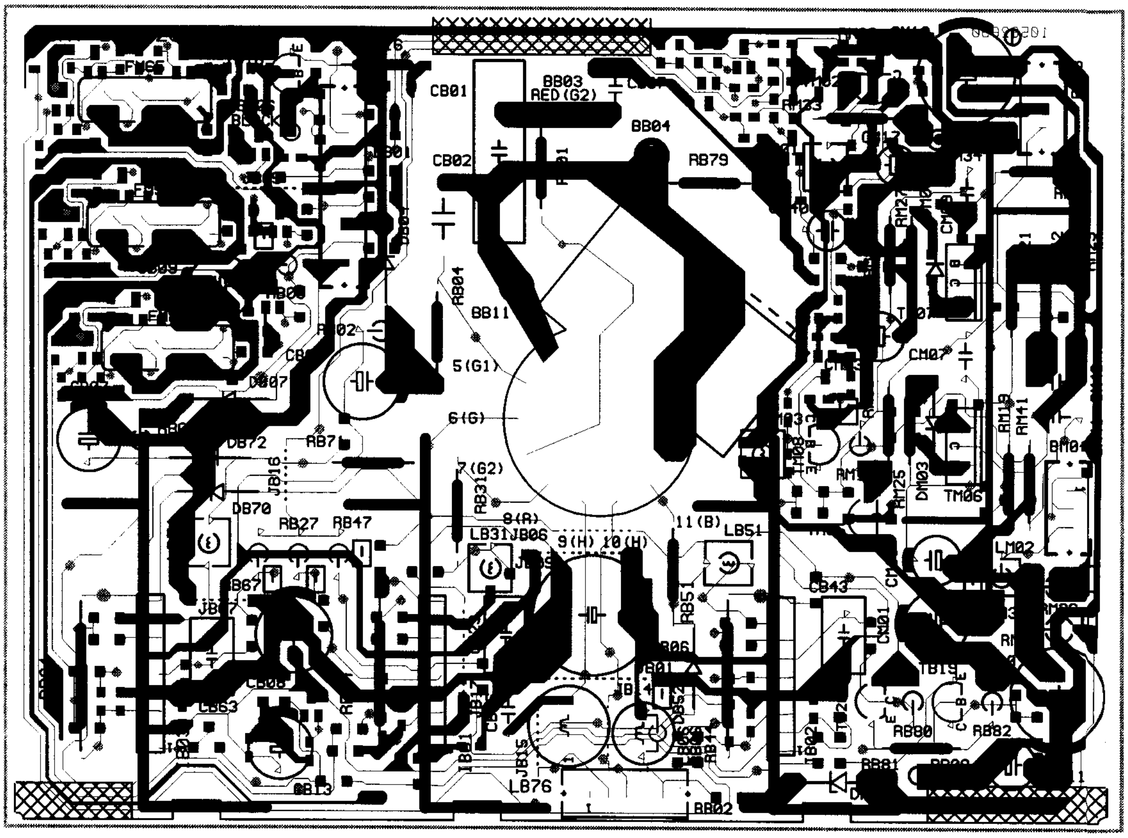

SOLDER SIDE - CÔTE SOUDURES - LÖTSEITE - LATO SALDATURE - LADO SOLDADURAS

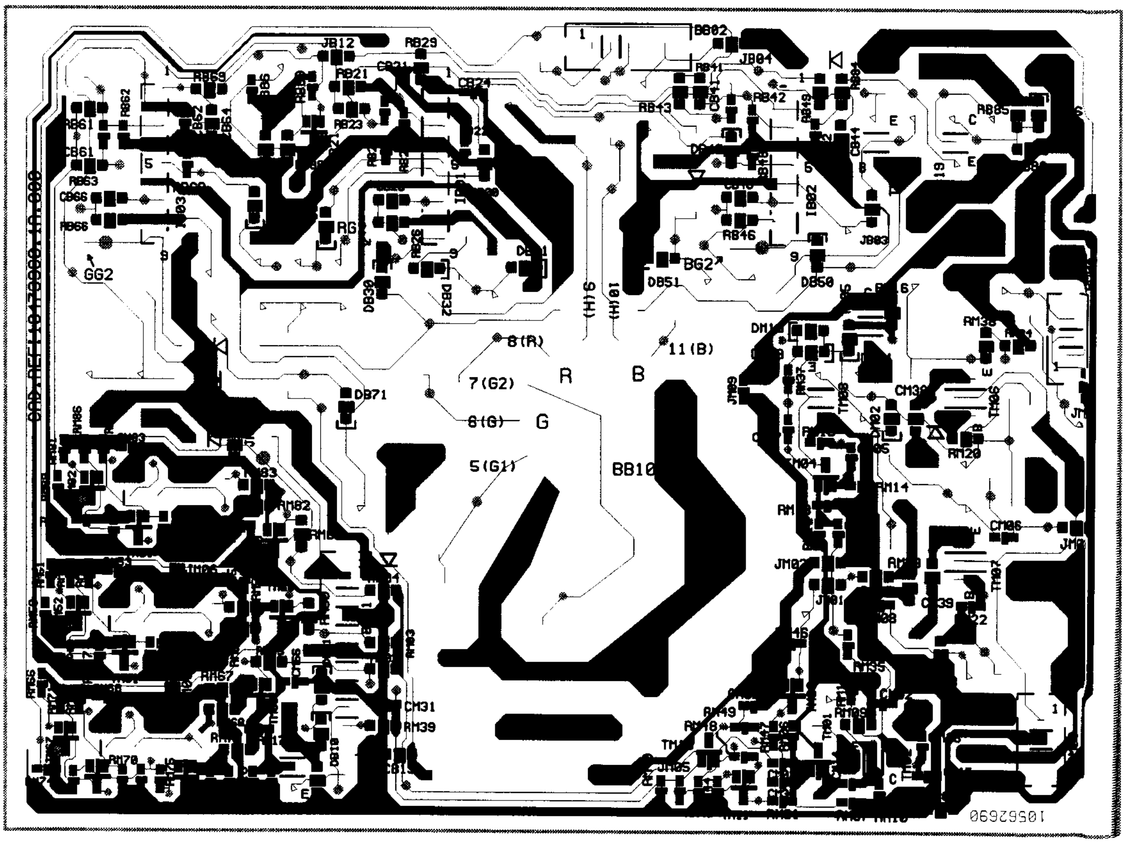

**VIDEO AMPLIFIER BOARD - PLATINE AMPLIFICATEURS VIDEO - VIDEOVERSTÄRKERPLATTE - PIASTRA AMPLIFICATORE VIDEO - PLATINA AMPLIFICADOR VIDEO**

**CRT BS19100**

COMPONENT SIDE - CÔTE COMPOSANTS - BESTÜCKUNGSSEITE - LATO COMPONENTI - LADO COMPONENTES

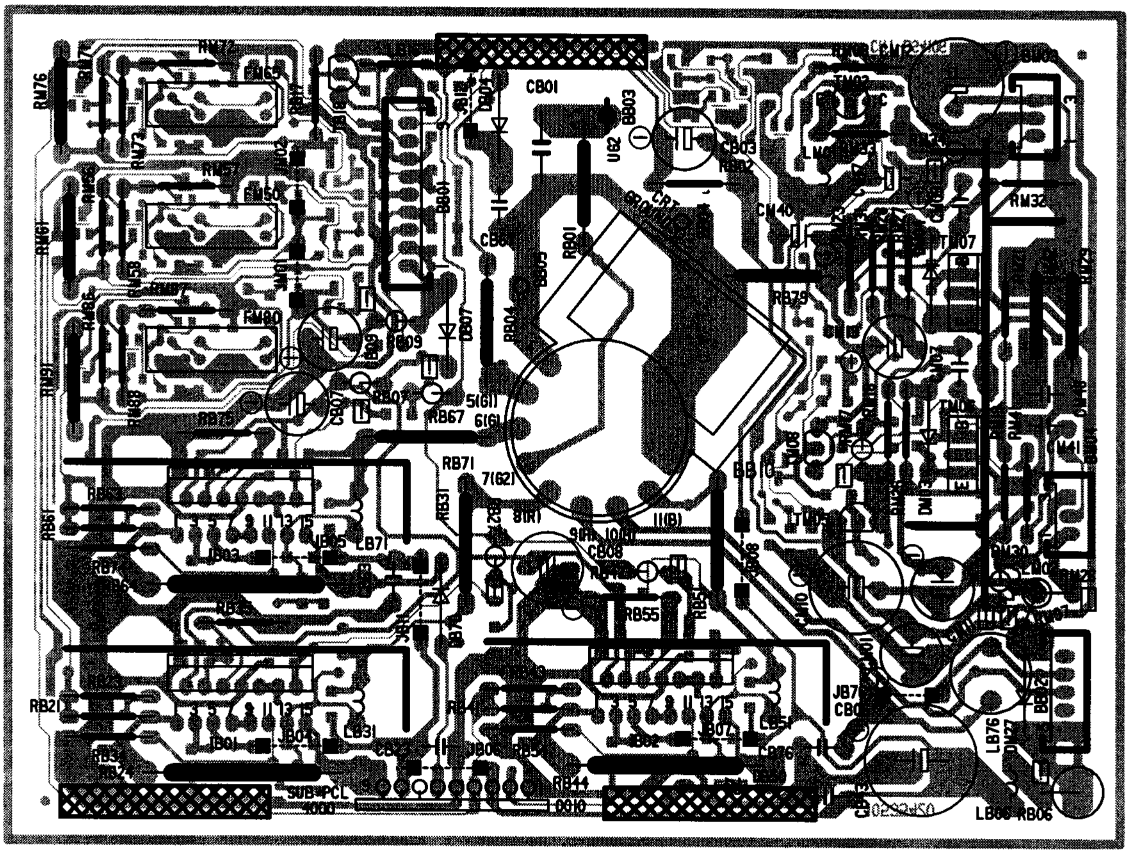

SOLDER SIDE - CÔTE SOUDURES - LÖTSEITE - LATO SALDATURE - LADO SOLDADURAS

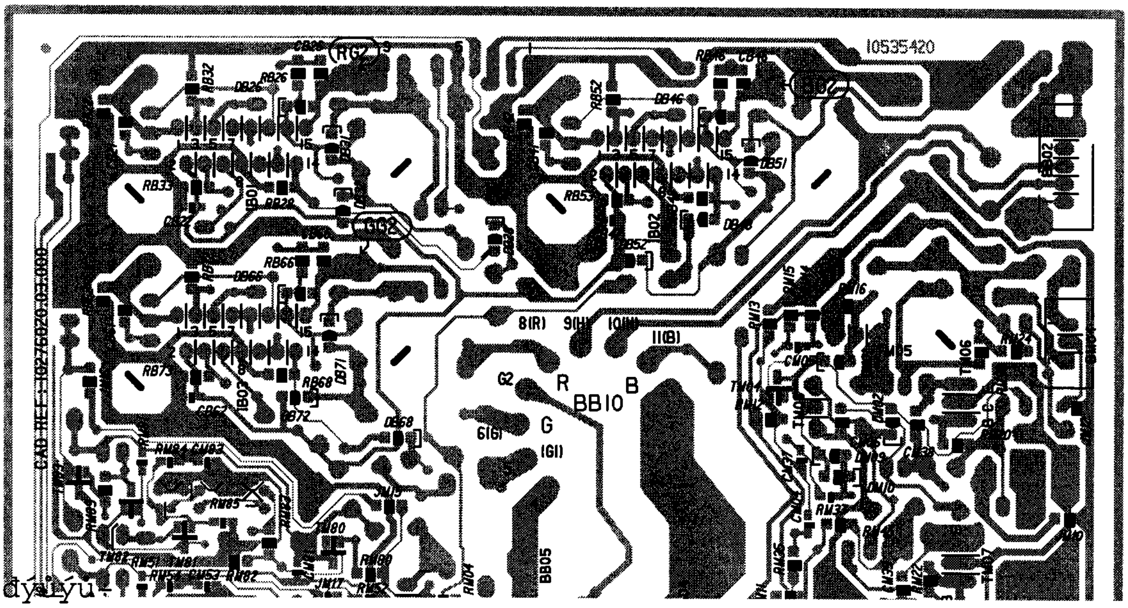

# LIST OF ABBREVIATIONS - LISTE DES ABREVIATIONS - ABKÜRZUNGEN
# LISTA DELLE ABBREVIAZIONI - LISTA DE ABREVIACIONES

- **AV_R_ OUT** Audio Right-Out
- **AV_I_ OUT** Audio Left-Out
- **AV_R_ IN** Audio Right-In
- **AV_L_ IN** Audio Left-In
- **AV_C_ IN** Chroma-In
- **AV_Y_ IN** Video-In
- **AV_Y_ OUT** Video-Out
- **AV1_8** Pin-8 Detector
- **BEAM_INFO** BEAM CURRENT INFORMATION
- **BG INFO** SWITCH BG
- **B_AV** B SIGNAL FROM AV
- **B_TXT** B SIGNAL FROM TEXTMODULE
- **CRT_B** B SIGNAL TO VIDEO AMPLIFIER
- **CRT_G** G SIGNAL TO VIDEO AMPLIFIER
- **CRT_R** R SIGNAL TO VIDEO AMPLIFIER
- **CVBS_SAT** SAT_VIDEO
- **DEGAUSS** DEGAUSS SIGNAL
- **E.W_DRIVE** EAST - WEST DRIVE SIGNAL
- **EW_BACK** FEED BACK INFORMATION
- **FB_AV** FAST BLANK SIGNAL FROM AV SCART
- **FB DETEC** FAST BLANKING DETECT
- **FB_TXT** FAST BLANK SIGNAL FROM TEXTMODUL
- **FRAME _DR** DRIVE SIGNAL FOR VERTICAL DEFLECTION
- **G_AV** G SIGNAL FROM AV
- **G_TXT** G SIGNAL FROM TEXTMODULE
- **HDFL** HORIZONTAL SYNC.
- **HDRV** DRIVE SIGNAL FOR HORIZONTAL DEFLECTION
- **HTR1 / HTR2** HEATER OUTPUT FROM THE DST TO CRT
- **I CUT** CUT OFF CURRENT
- **IIC-CL-1** I2C CLOCK BUS 1
- **IIC-CL-2** I2C CLOCK BUS 2
- **IIC-DA-1** I2C DATA BUS 1
- **IIC-DA-2** I2C DATA BUS 2
- **IR** INFRARED
- **L1_INFO** STANDARD L BAND 1
- **LDFL** LINE LOCKED CLOCK 27 MHz
- **LDR** LED DISPLAY
- **MAIN _Y** Y FROM CHROMA DECODER
- **MAIN _U** U FROM CHROMA DECODER
- **MAIN _V** V FROM CHROMA DECODER
- **M-RES** MASTER RESET TO MICROPROCESSOR
- **MUTE** MUTES AMPLFIERS
- **NMI** NON MASKABLE INTERRUPT ( alternate function of Pin 55 STR092)
- **NORM** SWITCH POLARITY OF THE VIDEO SIGNAL TUNER
- **PLL-ON** ENABLE DEFLECTION PLL
- **PKS** SIGNAL FOR ABL CIRCUIT (STV2161/STV2162)
- **R_AV** R SIGNAL FROM AV
- **R_TXT** R SIGNAL FROM TEXTMODULE
- **SAFE** SAFETY INFORMATION FROM DEFLECTION
- **SMPS_IN** FEED BACK SIGNAL FOR POWER SUPPLY REGULATION (STV2161/2)
- **SSC** SUPER SAND CASTEL CIRCUIT
- **TEMP_ABL** SIGNAL DST-TEMPERATURE SENSING CIRCUIT
- **T1_CVBS** COMPOSITE VIDEO BASEBAND FROM TUNER
- **U_SCART** SCART VOLTAGE
- **+USYS** SYSTEM VOLTAGE
- **+/- US** SOUND VOLTAGE
- **+UVERT** VERTICAL VOLTAGE
- **+UVFB** VERTICAL RETRACE VOLTAGE
- **+UVIDEO** VIDEO VOLTAGE FOR THE CRT BOARD
- **VA** VERTICAL REFERENCE OUT FROM TDA 9143
- **VDFL** VERTICAL SYNC.
- **V-SYNC** VERTICAL SYNC.FOR TELETEXT MODULE
- **5 V** 5V POWER SUPPLY
- **13 V** 12V POWER SUPPLY
- **5 VSTBY** 5V STAND BY
- **10 VSTBY** 10V STAND BY

**THOMSON** MULTI MEDIA

TV

Brandt FERGUSON SABA TELEFUNKEN THOMSON

**PARTS LIST**
**LISTE PIECES DETACHEES**
**ERSATZTEILLISTE**
**LISTA PARTI DI RICAMBIO**
**LISTA DE PIEZAS DE REPUESTO**

# THOMSON
# 52RW64E
# Chassis ICC19

## MODULES

| | | | |
|---|---|---|---|
| **MAIN** | **IC19M5MA08P004** | | |
| **ABL** | **ABLRP19** | **R** | **10637710** |
| **AMVD** | **AM/VD19000** | **R** | **10546730** |
| **AMVD** | **SUBAMVD19100** | | **10546720** |
| **CRT** | **CRTRP19 R** | **R** | **10284380** |
| **CRT** | **CRTRP19 G** | **R** | **10546590** |
| **CRT** | **CRTRP19 B** | **R** | **10529410** |
| **DCU** | **DCURP19** | **R** | **10468670** |
| **DVT** | **DVT19010** | **R** | **10510420** |
| **EMB** | **EMB19500** | **R** | **10600840** |
| **FCB** | **FCB1907** | **R** | **25312710** |
| **KDB** | **KDB1909** | **R** | **25382560** |
| **LDN** | **LDN1907** | | **25421050** |
| **PS** | **PSRP19** | **R** | **10527240** |
| **RGB** | **SUB RGB-PIRP19** | **R** | **10644830** |
| **RIR** | **IR1902** | **R** | **25421170** |
| **SCI** | **SCI19004** | **R** | **10581460** |
| **VM** | **VM19400** | **R** | **10609390** |

| | | | |
|---|---|---|---|
| **GR**001 | TSOP1333 | | 25358570 |
| **IA**001 | TDA7269 | | 10348790 |
| **IA**002 | TDA7298 | | 10348810 |
| **IA**010,**IB**012, **IG**011,**IL**062 | TL082CD FLAT | | 10364130 |
| **IF**001 | TDA8177F | | 10352880 |
| **II**050 | TDA9811/V3 | | 10336130 |
| **IK**001 | STV2040 | | 10379540 |
| **IK**002,003, **IP**002 | TL084/CP | | 46021200 |
| **IK**004,**IP**130 | MC7812/CT | | 46007600 |
| **IK**005 | MC7805/CT | | 46025200 |
| **IK**006 | L7912CV | | 15054150 |
| **IK**007 | M24C32BN1 | | 10462210 |
| **IK**008,015 | X24164 | | 10068250 |
| **IP**050,**IX**001 | MC7809/CT | | 70401402 |
| **IP**060 | TEA2261 | | 90542470 |
| **IP**140 | TDA8139 | | 10044580 |
| **IP**250 | K324PG(CNY75GA) | ⚠ | 10536210 |
| **IR**001 | ST90R92 | | 10441970 |
| **IR**002 | IC-ROM THOMSON V6.02-1 | | 1061194A |
| **IR**003 | M24C64-BN1 | | 10533930 |
| **IR**004 | MC14094BD/HEF4094BT/ BU4094BF FLAT | | 20016020 |
| **IR**020 | C19 M27C160-120F1 V6.01-1 | | 10652940 |
| **IR**030 | GM76G256AL-FW70 FLAT | | 10271860 |
| **IR**040 | 74F02 FLAT | | 10529250 |
| **IS**001,060 | MC4558CD IC SMD | | 10276220 |
| **IS**010 | MC78L08ACP | | 10308410 |
| **IS**100 | MSP8410D-B4 (DIE) | | 10546420 |
| **IS**200 | DPL3519 (DIE) | | 10546430 |
| **IT**001 | SDA5275-2S | | 10449670 |
| **IT**002 | HYB514400BJ-80 | | 10359750 |
| **IV**001[a] | STV2162 CUT2.2 | | 10529490 |
| **IV**001[c] | STV2165 | | 10360480 |
| **IV**300 | TDA8755 FLAT | | 10147010 |
| **IV**301,302 | MSM5412222-25-TS-K FLAT | | 10389960 |
| **IV**303 | MCU-1 PLUS FLAT | | 10598370 |
| **IV**305,308,311 | HEF4046BT FLAT | | 10261110 |
| **IV**306 | LM358D FLAT | | 10258670 |
| **IV**312 | TS462 FLAT | | 10606770 |
| **IV**601 | TDA9143N3 | | 10591540 |
| **IV**602 | TDA4665T FLAT | | 10155740 |
| **IV**780 | HEF4053BT/BU4053BF/ UPD4053BG FLAT | | 20230300 |
| **IX**900 | TEA6415C | | 15081290 |
| **ZL**041 | MP160 | ⚠ | 10457130 |
| **ZV**301 | MP50 | ⚠ | 10457120 |

| | | |
|---|---|---|
| **TA**001[b],002[b], 052,054,**TB**001, 002,052,054, **TG**001,002,052, 054 | BDW93CFI | 10599300 |
| **TA**001[a],**TI**030, **TP**150,166,190, **TV**001[c],051,053, 063,071,073, 083,382,393, 600,640,660, 680,681,775, 785,**TY**004 | BC856B SMD | 16006310 |
| **TA**002[a],006,050, **TB**006,050, **TG**006,050, **TI**031,032,070, **TL**001,062,063, **TP**026,027,152, 161,162,167, 170,175,**TR**002, 102,105,**TV**052, 072,395,601, 603,604,641, 642,661,662, 682,**TX**955,960, 965,**TY**001,002, 003,005 | BC846B SMD | 16006260 |
| **TA**003,004,053, 055,**TB**003,004, 053,055,**TG**003, 004,053 | BDW94CFI | 10599200 |
| **TA**005,051, **TB**005,051, **TG**005,051, **TK**106,206,306, **TV**002[b] | BF420 | 16003080 |
| **TI**010,033,034, 040,045,050, **TP**145,**TR**091, 095,106,**TT**004 | BCR141 SMD | 16006890 |
| **TI**020,**TV**307 | BF799 SMD | 35031670 |

**xxxx[a] : MAIN** **xxxx[b] : DCU** **xxxx[c] : VM** **xxxx[d] : KDB**

**R : RECYCLED PART**
**: PIECE RECYCLEE**
**: AUSTAUSCHTEILE**
**: RICAMBIO RICICLATO**
**: MODULO REPROCESADO**

For any requests, please contact THOMSON multimedia after sales service area
Pour toutes précisions, contactez votre service apres vente local THOMSON multimedia
Für weitere Auskünfte, wenden Sie sich bitte an die THOMSON multimedia Kundendienste
Per precisazioni, contattare l'assistenza tecnica THOMSON multimedia
Para cualquier pregunta, por favor contactar con el responsable de zona del servicio postventa de THOMSON multimedia

**09 / 99** **35094280**
**REV. N° 0 00 / 00** **00000000**


No copying, translation, modification on other use authorized. All rights reserved worldwide. • Tous droits de reproduction, de traduction, d'adaptation et d'exécution réservés pour tous les pays. • Sämtliche Urheberrechte an diesen Texten und Zeichnungen stehen uns zu. Nachdrucke, Vervielfältigungen - auch auszugsweise - nur mit unserer vorherigen Zustimmung zulässig. Alle Rechte vorbehalten. • I diritti di riproduzione, di traduzione, e esecuzione sono riservati per tutti i paesi. • Derechos de reproduccion, de traduccion, de adaptacion y de ejecucion reservados para todos los paises.

| | | |
|---|---|---|
| **TK**001,003,005,009,027,101,132,201,232,301,332,**TS**001,002,**TT**002,008,009,010,**TV**006,007,008,011,019,020,**TX**620,622,650,652 | BC857B SMD | 30946660 |
| **TK**002,004,020,022,023,024,028,130,230,330,**TM**104,109,110,204,209,210,304,309,310,**TP**001,**TS**003,004,**TT**001,003,006,007,011,012,**TV**001[b],003,004,005,014,**TX**621,651,830,831,832,833 | BC847B SMD | 11070770 |
| **TK**102,104,202,204,302,304 | BF883S | 10162190 |
| **TK**103,105,203,205,303,305 | BF872 | 10162200 |
| **TK**107,207,307,**TM**101,108,201,208,301,308,**TP**270 | BC557B | 16001060 |
| **TL**004 | MPSW01A | 70436520 |
| **TL**005 | MPS750 | 16001340 |
| **TL**028 | TIP122FP | 25358380 |
| **TL**030 | ON4977/BU2525AX | 10461310 |
| **TM**006 | 2SA1837 | 16001500 |
| **TM**007 | 2SC4793 | 16001600 |
| **TM**102,202,302 | BC337-40 | 45001466 |
| **TM**105,205,305,**TP**238 | BC547B | 16000890 |
| **TP**025 | 600V 1A25 | 10353960 |
| **TP**060 | BUL810TH | 10224370 |
| **TP**146 | BD241C | 16001880 |
| **TP**220 | 2SK1460 | 15046790 |
| **TP**222 | BC327 | 16000430 |
| **TP**223,224,271 | BC547C | 16000900 |
| **TR**048 | BCR185 SMD | 16006900 |
| **TV**002 | TIP122 | 10045750 |
| **TV**010 | 2SC3675 | 16004070 |
| **TV**108 | BC327-40 | 16000450 |
| **TV**300 | BCP69 SMD | 35031480 |
| **TV**303,381,392 | BF660 SMD | 16005830 |
| **TX**505 | BC848B SMD | 35030590 |
| **TX**910,920,950,**TZ**050,051 | BC546B | 45001866 |

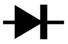

| | | |
|---|---|---|
| **DA**001[b],002[b],003,010,011,050,051,052,059,060,**DB**001,002,003,010,011,050,051,052,059,060,**DF**001,**DG**001,002,003,010,011,050,051,052,060,**DK**001[d],002[d],003,004,013,**DL**092,**DP**027,061,218,219,223,224,226,227,231,232,237,238,239,268,**DR**091,**DS**001,002,003,**DV**002,003,004,007,008,009,010,011,014,015,020,027,028,029,**DZ**050 | 1N4148 | 44009209 |
| **DA**001[a],**DF**002,028,**DK**005,006,007,008,102,106,107,201,202,206,207,302,306,307,**DL**070,072,**DM**101,102,105,106,107,201,202,205,206,207,301,302,305,306,307,**DP**051,060,151,152,160,175,178,179,190,**DR**030,031,090,**DT**001,002,003,004,005,006,007,008,009,010,**DV**025,026,027,028,038,039,**RV**052 | LL4148 SMD | 16012450 |
| **DA**002[a],**DV**011,012 | LL42 SMD | 16012530 |
| **DA**005,006,053,058,**DB**005,006,053,058,**DF**031,033,**DG**005,006,053,**DK**001[b],002[b],010,011,012,**DL**001,051,052,**DM**110,111,210,211,310,311,**DP**050,**DV**005,006,031,032,033 | RGP10G | 10459090 |
| **DA**008,009,056,057,**DB**008,009,056,057,**DG**008,009,056,**DV**017 | BZX55C6V2 | 20475410 |
| **DF**007 | ZMM15 SMD | 16030060 |
| **DF**011 | BZW04-48 | 10351880 |
| **DH**001 | ZMM33 | 10376460 |
| **DI**001,002,040,041,051,070,071 | BA782S | 20542050 |
| **DK**009 | MA2062-A 6V | 20707320 |
| **DK**103,104,113,203,204,213,303,304,313 | EGP10G | 10542140 |
| **DK**105,205,305 | 1N4007GP | 10455230 |
| **DK**108,208,308 | BZT03/D150 | 70402351 |

| | | |
|---|---|---|
| **DL**030 | DTV32F-1500 | 10452490 |
| **DL**032 | BYR29F-600 | 10569340 |
| **DL**034,036 | EGP10D | 20953640 |
| **DL**041,**DP**140 | BYW29-150 | 16009140 |
| **DL**043 | RGP10M | 10455320 |
| **DL**046 | RGP15-20 | 10340890 |
| **DL**050 | BZX85C22 | 11072690 |
| **DL**057,**DS**061,062,**DV**104,108,**DX**120,151,220,251,301,351 | BAV103 SMD | 10155030 |
| **DL**060 | ZMM3,3 | 16030170 |
| **DL**066 | BZX55B47 | 11073450 |
| **DL**071 | BZX55C20 | 30948810 |
| **DP**022,113 | FUF4005/MUR160 | 16009580 |
| **DP**039,040 | RGP02-20 | 10472330 |
| **DP**041 | BAT42 | 16007410 |
| **DP**052,133,134 | 1N4001 | 16008160 |
| **DP**053,261,263 | RGP15G | 10272800 |
| **DP**108,109 | RGP30D | 10455370 |
| **DP**110A,110B | RGP50M | 10298160 |
| **DP**112 | MUR1100E | 10360280 |
| **DP**130 | MUR420 | 16009630 |
| **DP**201 | GBU4M | 10474680 |
| **DP**213 | BZX55C33 | 11073690 |
| **DP**225 | ZPD4,7/BZX55C4V7 | 20475400 |
| **DP**233,234,236,240,243 | BA159 | 16008120 |
| **DP**235 | BZX55C18 | 11073680 |
| **DP**265,267 | S410D | 10527250 |
| **DR**104 | BZX55B9V1 | 70438220 |
| **DV**018,019 | BYD43-20 | 10301970 |
| **DV**101 | ZMM6,8 SMD | 70439940 |
| **DV**303,305,307 | BB729S SMD | 20542090 |
| **DV**623 | BZX84C5V1 SMD | 16030330 |
| **DX**810 | BZX55B8V2 | 40441820 |
| **DX**814 | BZX55B5V1/ZPD5V1 2% | 44035702 |
| **GE**001 | TLUV5300 LED | 11137650 |

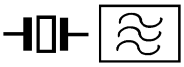

| | | |
|---|---|---|
| **FI**010 | OFWK3954M FOS | 10357610 |
| **FI**015 | OFWG3970M FOS | 10512420 |
| **FI**020 | OFWK9453M FOS | 10176450 |
| **FV**001 | 12M0HZ | 10539340 |
| **FV**640,660 | | 10295430 |
| **FV**680 | | 10295420 |
| **QI**053 | 6M0HZ | 48042300 |
| **QI**070 | 6M5HZ | 20356510 |
| **QR**001 | 27M0HZ | 10254120 |
| **QS**040 | 18M432HZ | 10334670 |
| **QT**001 | 20M48HZ | 10495020 |
| **QV**601 | 4M433619HZ | 10087710 |
| **QV**602 | 3M579545HZ | 10087720 |

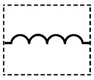

| | | |
|---|---|---|
| **FI**001 | 40M4HZ | 20300950 |
| **FI**002 | 38M9HZ | 10319260 |
| **FI**030 | 77M8HZ | 10348570 |
| **FI**040 | 6M6HZ | 10437980 |
| **FK**130,230,330 | 100NS | 10203890 |

| | | | |
|---|---|---|---|
| **LV**326,380 | 7M96HZ | | 10519350 |
| **LV**350 | 7M96HZ | | 10519370 |

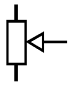

| | | | |
|---|---|---|---|
| **PI**030,035 | 2K2 OHM | | 10308240 |
| **PI**050 | 22K0 OHM | | 10272680 |
| **PP**267 | 100R0 OHM | | 10260330 |
| **PS**001 | 1M0 OHM | | 42045200 |
| **PV**003,004 | 1K OHM | | 42032100 |
| **PV**101,201,301 | 2M2 OHM | | 10174000 |

| | | | |
|---|---|---|---|
| **RA**001,**RB**001, **RG**001,**RK**057, **RP**003,004,007, 008,011,022 | 10K0 OHM 1% 0,40W | | 15010340 |
| **RA**003,051, **RB**003,051, **RG**003,051 | 332R0 OHM 1% 0,40W | | 41289309 |
| **RA**005,053, **RB**005,053, **RG**005,053 | 162R0 OHM 1% 0,40W | | 15011850 |
| **RA**007,060, **RB**007,060, **RG**007,060 | 8K87 OHM 1% 0,40W | | 15021900 |
| **RA**009,057, **RB**009,057, **RG**009,057 | 1R8 OHM 1% 1W | | 13085450 |
| **RA**012,014,058, 059,**RB**012,014, 058,059,**RG**012, 014,058,059 | 0R47 OHM 10% 0,40W | ⚠ | 15022650 |
| **RA**013**b**,055, **RB**013,055, **RG**013,055 | 267K0 OHM 1% 0,40W | | 15014920 |
| **RA**013**a**,014,030 | 4R7 OHM 5% 0,35W | ⚠ | 10226310 |
| **RA**020,064, **RB**020,064, **RG**020,064 | 2K43 OHM 1% 0,40W | | 15015580 |
| **RA**061,**RB**061, **RG**061 | 8K25 OHM 1% 0,40W | | 15021840 |
| **RF**011 | 1R5 OHM 5% 0,50W | ⚠ | 15022560 |
| **RF**012 | 1R82 OHM 1% 0,70W | | 10451420 |
| **RF**013 | 1R21 OHM 1% 0,70W | | 13010820 |
| **RF**015 | 15R0 OHM 265V PTC | ⚠ | 10237730 |
| **RF**020 | 270R0 OHM 1% 0,70W | | 10302230 |
| **RK**061,065,067, 069 | 1K0 OHM 1% 0,40W | | 15012580 |
| **RK**080 | 15K0 OHM 1% 0,40W | | 15011710 |
| **RK**085 | 4K75 OHM 1% 0,40W | | 15018710 |
| **RK**101,201,301, **RM**117,217,317, **RP**050,**RV**312, 327,393,601 | 10R0 OHM 5% 0,25W | ⚠ | 15009580 |
| **RK**104,204,304 | 47R0 OHM 5% 0,70W | ⚠ | 10181910 |
| **RK**107,207,307 | 392R0 OHM 1% 0,40W | | 15017110 |
| **RK**112,212,312 | 2K2 OHM 5% 0,50W | ⚠ | 10239310 |
| **RK**114,116,118, 120,214,216, 218,220,314, 316,318,320 | 330R0 OHM 5% 0,50W | ⚠ | 10239250 |
| **RK**117,217,317, **RL**037 | 330R0 OHM 10% 0,50W | | 14050190 |
| **RK**119,219,319 | 1K0 OHM 5% 0,50W | ⚠ | 10239280 |
| **RK**123,124,223, 224,323,324 | 1K5 OHM 5% 0,50W | | 10121880 |
| **RK**129,229,329 | 6K81 OHM 1% 0,40W | | 15020590 |
| **RK**228 | 47K5 OHM 1% 0,40W | | 13066180 |
| **RL**013 | 4R7 OHM 5% 0,50W | ⚠ | 15010040 |
| **RL**015 | 1R0 OHM 5% 0,25W | ⚠ | 15009730 |
| **RL**029 | 2R2 OHM 5% 0,50W | ⚠ | 10440420 |
| **RL**040 | 0R27 OHM 5% 2,50W | | 10263600 |
| **RL**043 | 2R2 OHM 5% 0,70W | ⚠ | 13000480 |
| **RL**052 | 54K9 OHM 1% 0,70W | | 10224320 |
| **RL**081 | 68K1 OHM 1% 0,12W | | 10433880 |
| **RL**082 | 59K0 OHM 1% 0,12W | | 10516830 |
| **RM**101,201,301 | 220R0 OHM 5% 0,25W | ⚠ | 15009810 |
| **RP**001,023 | 182K0 OHM 1% 0,40W | | 15012250 |
| **RP**009,010 | 3K32 1% 0,40W | | 41226709 |
| **RP**012 | 39K2 OHM 1% 0,40W | | 15017130 |
| **RP**015 | 8K66 OHM 1% 0,40W | | 15021880 |
| **RP**016 | 8K06 OHM 1% 0,40W | | 15021810 |
| **RP**017 | 7K5 OHM 1% 0,40W | | 15021220 |
| **RP**018 | 5K36 OHM 1% 0,40W | | 15019620 |
| **RP**020 | 0R12 OHM 5% 2,50W | ⚠ | 10334390 |
| **RP**021 | 10K2 OHM 1% 0,40W | | 15010370 |
| **RP**022 | 100R0 OHM 5% 4,50W | | 10379830 |
| **RP**027 | 15K4 OHM 1% 0,40W | | 15011730 |
| **RP**030 | 100K OHM 1% 0,40W | | 15010170 |
| **RP**031 | 13K0 OHM 1% 0,40W | | 15011210 |
| **RP**032,035 | 22K1 OHM 1% 0,40W | | 41303301 |
| **RP**056,057 | 1K3 OHM 1% 0,40W | | 15012810 |
| **RP**066 | 3K65 OHM 1% 0,40W | | 13066710 |
| **RP**100 | 10M0 OHM 5% 0,70W | ⚠ | 10074320 |
| **RP**207 | 2R7 OHM 5% 4,50W | | 10379110 |
| **RP**220,**RV**001 | 4R7 OHM 5% 2,5W | | 10471330 |
| **RP**244 | 7K15 OHM 1% 0,25W | | 15021170 |
| **RS**042 | 4R7 OHM 5% 0,25W | ⚠ | 35032200 |
| **RV**069 | 150K0 OHM 1% 0,40W | | 41243301 |
| **RX**503 | 15R0 OHM 5% 0,25W | ⚠ | 15009630 |
| **RZ**058 | 68K1 OHM 1% 0,40W | | 41307009 |
| **RZ**059 | 18K2 OHM 1% 0,40W | R | 15012330 |

| | | | |
|---|---|---|---|
| **CK**103,105,107, 203,205,207, 303,305,307 | 10N0F 10% 400V | | 15001080 |
| **CK**117,217,317, **CV**049 | 1N0F 2K0V | | 14034870 |
| **CK**123,223,323 | 470P0F 10% 3K0V | | 14006050 |
| **CK**129,229,329 | 100N0F 20% 400V | | 13071240 |
| **CL**030 | 1N9F 5% 2K0V | ⚠ | 10559090 |
| **CL**031 | 10N0F 3.5% 1K5V | | 43180300 |
| **CL**032 | 20N0F 5% 400V | | 43388900 |
| **CL**037 | 510N0F 5% 250V | | 10381880 |
| **CL**041,043 | 330P0F 20% 1K0V | | 14035270 |
| **CL**052 | 10N0F 5% 400V | | 14035870 |
| **CL**146 | 150P0F 20% 1K0V | | 30937590 |
| **CM**148,248,348 | 470P0F 10% 400V | | 14002340 |
| **CP**020 | 150U0F 385V | | 43424800 |
| **CP**022,135,137, 138 | 470P0F 10% 2K0V | | 10099390 |
| **CP**023 | 2N2F 10% 1K0V | | 13090980 |
| **CP**050,053 | 330P0F 20% 400V | | 14002220 |
| **CP**100 | 1N5F 20% 400V | ⚠ | 10344860 |
| **CP**101 | 150P0F 20% 400V | ⚠ | 20738090 |
| **CP**112 | 3N3F 5% 630V | | 10490550 |
| **CP**201,202 | 100N0F 20% 275V | ⚠ | 10331520 |
| **CP**204 | 1N5F 10% 1K0V | | 20338740 |
| **CP**205,206 | 4N7F 1K0V | | 10058740 |
| **CP**209 | 220U0F 20% 400V | | 10510680 |
| **CP**210 | 22U0F 20% 400V | | 10114340 |
| **CP**221 | 3N3F 20% 1K0V | | 43324300 |
| **CV**045,047 | 4N7F 50% 2K0V | | 14034420 |
| **CV**048 | 820P0F 5% 2K0V | | 10513370 |

| | | | |
|---|---|---|---|
| **LL**001 | DRIVER | | 10468760 |
| **LL**008 | DSTGDS35 | ⚠ | 10641600 |
| **LL**037 | 9U0H | ⚠ | 10545340 |
| **LP**020 | SMT57LZ | ⚠ | 10549750 |
| **LP**070 | DRIVER | ⚠ | 60412091 |
| **LP**201 | | ⚠ | 10203560 |
| **LP**250 | SMT17 | ⚠ | 10534490 |
| **LV**002 | | | 10458460 |

## OTHER PARTS
## AUTRES PIECES
## SONSTIGE TEILE
## ALTRE PARTI
## OTRAS PIEZAS

| | | | |
|---|---|---|---|
| **BJ**010 | CINCH SOCKET<br>PRISE CINCH<br>CINCH-BUCHSE<br>PRESA CINCH<br>TOMA CINCH | | 10037440 |
| **BJ**011 | SVHS SOCKET<br>PRISE SVHS<br>S-VHS-BUCHSE<br>PRESA SVHS<br>TOMA SVHS | | 20392900 |
| **BK**101,201,301 | CATHODE RAY TUBE SOCKET<br>SUPPORT TUBE CATHODIQUE<br>BILDROEHRENFASSUNG<br>SUPPORTO TUBO CATODICO<br>SOPORTE T.R.C | ⚠ | 10543870 |
| **BQ**012 | JACK SOCKET<br>PRISE JACK<br>BUCHSE<br>PRESA JACK<br>TOMA JACK | | 10539510 |
| **BS**004 | CINCH SOCKET<br>PRISE CINCH<br>CHINCH-BUCHSE<br>PRESA CINCH<br>TOMA CINCH | | 10261740 |
| **BX**100,200,300 | SCART SOCKET<br>PRISE PERITEL<br>EURO-AV-BUCHSE<br>EUROPRESA NORMALIZZATA<br>EUROCONECTOR | | 10402480 |
| **FK**101,201,301 | 63MI0A 250V TIME LAG FUSE<br>63MI0A 250V FUSIBLE<br>63MI0A 250V SICHERUNG<br>63MI0A 250V FUSIBILE<br>63MI0A 250V FUSIBLE | ⚠ | 25336830 |
| **FM**102,202,302 | 63MI0A 250V TIME-LAG FUSE<br>63MI0A 250V FUSIBLE<br>63MI0A 250V SICHERUNG<br>63MI0A 250V FUSIBILE<br>63MI0A 250V FUSIBLE | ⚠ | 10566870 |

| | | | |
|---|---|---|---|
| **FP**201 | 2A5T TIME-LAG FUSE<br>2A5T FUSIBLE TEMPORISE<br>2A5T THERMISCHE SICHERUNG<br>2A5T FUSIBLE TEMPORIZZATO<br>2A5T FUSIBLE TEMPORIZADO | ⚠ | 10246750 |
| **IK**007,008,015 | IC SUPPORT 2X4<br>SUPPORT CI 2X4<br>IC-FASSUNG 2X4<br>SUPPORTO CI 2X4<br>SOPORTE CI 2X4 | | 67449100 |
| **IR**001 | IC SUPPORT 4X17<br>SUPPORT CI 4X17<br>IC-FASSUNG 4X17<br>SUPPORTO CI 4X17<br>SOPORTE CI 4X17 | | 67626900 |
| **IR**020 | IC SUPPORT 2X21<br>SUPPORT CI 2X21<br>IC-FASSUNG 2X21<br>SUPPORTO CI 2X21<br>SOPORTE CI 2X21 | | 67085500 |
| **NH**001 | CTT5000T UHF/VHF TUNER<br>CTT5000T TETE UHF/VHF<br>CTT5000T UHF/VHF TUNER<br>CTT5000T TUNER UHF/VHF<br>CTT5000T SINTONIZADOR UHF/VHF | | 20808880 |
| **PE**130 | FOCUS BLOCK 75M0 OHM<br>BLOC FOCUS 75M0 OHM<br>FOCUS BLOCK 75M0 OHM<br>BLOCCO FOCUS 75M0 OHM<br>BLOQUE FOCUS 75M0 OHM | ⚠ | 15249840 |
| **PH**200 | ON/OFF SWITCH<br>CONTACTEUR MARCHE/ARRET<br>EIN-AUS SCHALTER<br>CONTATTORE ACCESO/SPENTO<br>CONTACTOR MARCHA/PARADA | ⚠ | 10276500 |
| **PT**580 | SPARK GAP<br>ECLATEUR<br>FUNKENSTRECKE<br>SPINTEROMETRO<br>EXPLOSOR | ⚠ | 15154190 |
| **SK**001,002,003,<br>004,005,006,<br>007 | MICROSWITCH<br>MICRO CONTACTEUR<br>MIKROSCHALTER<br>MICROINTERRUTTORE<br>MICROCONTACTOR | | 30011100 |

## EQUIPMENT/PRESENTATION
## EQUIPEMENT/PRESENTATION
## AUSSTATTUNG/GEHAEUSE
## PARTI VARIE
## EQUIPO/PRESENTACION

| | | |
|---|---|---|
| PROTECTIVE CAP, PLASTIC<br>PROTECTEUR PLASTIQUE<br>ABDECKUNG, KUNSTSTOFF<br>PROTEZIONE IN PLASTICA<br>PROTECCION, PLASTICO | | 35071000 |
| UPPER BOX<br>EMBALLAGE SUPPERIEURE<br>KARTON OBEN<br>IMBALLAGGIO SUPERIORE<br>EMBALAJE SUPERIOR | | 35070940 |
| FITTING DOWNER<br>FOND DE CARTON<br>POLSTER UNTEN<br>DISTANZIATORE INFERIORE<br>CALZO INFERIOR | | 10524970 |
| ADAPTER ANTENNA<br>ADAPTATEUR D'ANTENNE<br>ADAPTER ANTENNE<br>ADATTATORE ANTENNA<br>ADAPTADOR ANTENA | | 10460690 |
| CABINET ASSY<br>COFFRET EQUIPE<br>GEHAEUSE KPL<br>MOBILE COMPLETO<br>MUEBLE EQUIPADO | | 25397880 |
| REAR PANEL UPPER<br>DOS SUPERIEUR<br>RUECKWAND OBEN<br>PANNELLO POSTERIORE SUPERIORE<br>TAPA POSTERIOR SUPERIOR | ⚠ | 25418870 |
| REAR PANEL DOWNER<br>DOS INFERIEUR<br>RUECKWAND UNTEN<br>PANNELLO POSTERIORE INFERIORE<br>TAPA POSTERIOR INFERIOR | ⚠ | 25418880 |
| FRONT COVER ASSY<br>FACADE EQUIPEE<br>FRONTPLATTE KPL<br>PANNELLO FRONTALE COMPLETO<br>PANEL FRONTAL EQUIPADO | | 25398880 |
| LOGO THOMSON<br>LOGO THOMSON<br>SCHRIFTZUG THOMSON<br>MARCHIO THOMSON<br>LOGOTIPO THOMSON | | 25388800 |
| LOUDSPEAKER GRID<br>GRILLE HAUT PARLEUR<br>LAUTSPRECHERGITTER<br>GRIGLIA ALTOPARLANTE<br>REJILLA ALTAVOZ | | 25398900 |
| COVER JACK SOCKET<br>CACHE PRISE JACK<br>ABDECKUNG BUCHSE<br>COPERCHIO PRESA JACK<br>CUBIERTA TOMA JACK | | 25298150 |
| UNIT FOCUS SUPPORT<br>SUPPORT BLOC FOCUS<br>BLOCK FOCUS HALTER<br>SUPPORTO GRUPPO FOCUS<br>SOPPORTO BLOQUE FOCUS | ⚠ | 15143370 |
| IR SUPPORT<br>SUPPORT IR<br>HALTER IR<br>SUPPORTO IR<br>SOPORTE IR | ⚠ | 15162500 |
| 8R OHM 20W LOUDSPEAKER 130MM<br>8R OHM 20W HAUT PARLEUR 130MM<br>8R OHM 20W LAUTSPRECHER 130MM<br>8R OHM 20W ALTOPARLANTE 130MM<br>8R OHM 20W ALTAVOZ 130MM | | 10316940 |
| 8R OHM 15W LOUDSPEAKER 27X42<br>8R OHM 15W HAUT PARLEUR 27X42<br>8R OHM 15W LAUTSPRECHER 27X42<br>8R OHM 15W ALTOPARLANTE 27X42<br>8R OHM 15W ALTAVOZ 27X42 | | 10317160 |
| ON/OFF BUTTON<br>TOUCHE MARCHE/ARRET<br>EIN-AUS TASTE<br>TASTO ACCESO/SPENTO<br>TECLA MARCHA/PARADA | | 25398850 |
| BUTTON ASSY<br>ENSEMBLE DE TOUCHES<br>TASTENEINHEIT<br>ASSIEME TASTI<br>CONJUNTO DE TECLAS | | 25398840 |
| HOLDER CONTROL UNIT<br>SUPPORT DE COMMANDES<br>HALTER BEDIENTEIL<br>SUPPORTO DI COMANDO<br>SOPORTE DE MANDO | | 25398520 |
| POWER SUPPLY LEAD<br>CORDON D'ALIMENTATION<br>NETZKABEL<br>CAVO DI ALIMENTAZIONE<br>CABLE DE ALIMENTACION | ⚠ | 10318870 |
| RETAINING RAIL<br>REGLETTE DE MAINTIEN<br>HALTESCHIENE<br>BARRA DI FISSAGGIO<br>LISTON DE SUJECTION | | 25433730 |
| SCREEN<br>ECRAN<br>BILDSCHIRM<br>SHERMO<br>PANTALLA | | 25397190 |
| GLASS PROTECTION<br>VITRE DE PROTECTION<br>GLAS SCHULTZ<br>VETRO DI PROTEZIONE<br>CRISTAL DE PROTECCION | | 25397180 |
| MIRROR<br>MIROIR<br>SPIEGEL<br>SPECCHIO<br>ESPEJO | | 25394840 |
| ADHESIVE TAPE FOR 10540360<br>RUBAN ADHESIF 10540360<br>KLEBEBAND FUR 10540360<br>NASTRO ADESIVO POR 10540360<br>CINTA ADHESIVO POR 10540360 | | 15236120 |
| CATHODE RAY TUBE GREEN<br>TUBE CATHODIQUE VERT<br>FARBBILDROEHRE GRUEN<br>TUBO CATODICO VERDE<br>T.R.C VERDE | | 15339670 |
| CATHODE RAY TUBE BLUE<br>TUBE CATHODIQUE BLEU<br>FARBBILDROEHRE BLAU<br>TUBO CATODICO AZZURO<br>T.R.C AZUL | | 15339710 |
| CATHODE RAY TUBE RED<br>TUBE CATHODIQUE ROUGE<br>FARBBILDROEHRE ROT<br>TUBO CATODICO ROSSO<br>T.R.C ROJO | | 15339700 |
| DEFLECTION YOKE<br>DEVIATEUR<br>ABLENKEINHEIT<br>BOBINA DI DEFLESSIONE<br>DEFLECTOR | | 10540340 |
| FLEXI BOARD (COIL BSVM)<br>CABLE PLATINE (BOBINE BSVM)<br>KABEL PLATTE (SPULE BSVM)<br>CAVO PIASTRA (BOBINA BSVM)<br>CABLE PLATINA (BOBINA BSVM) | | 10540360 |
| FITTING UPPER<br>DESSUS DE CARTON<br>POLSTER OBEN<br>DISTANZIATORE SUPERIORE<br>CALZO SUPERIOR | | 10524990 |
| FITTING RIGHT/LEFT<br>COTE DE CARTON<br>POLSTER RECHTS/LINKS<br>DISTANZIATORE DESTRO/SINISTRO<br>CALZO DERECHA/IZQUIERDA | | 10524980 |
| FOLDING BOX RP52, CPL<br>EMBALLAGE CARTON RP52 COMPLET<br>KARTON RP52, KPL<br>IMBALLAGGIO CARTONE RP52<br>EMBALAJE CARTON RP52 | | 35070910 |
| RCT4130 REMOTE CONTROL<br>RCT4130 TELECOMMANDE<br>RCT4130 FERNBEDIENUNG<br>RCT4130 TELECOMANDO<br>RCT4130 TELEMANDO | | 21016730 |

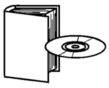

| | |
|---|---|
| RP19 SERVICE MANUAL EUROPE<br>RP19 DOC TECHNIQUE EUROPE<br>RP19 TECHNISCHE DOKUMENTATION EUROPE<br>RP19 DOCUMENTAZIONE TECNICA EUROPE<br>RP19 DOCUMENTACION TECNICA EUROPE | 35064590 |
| RP19 SERVICE MANUAL SUPPLEMENT<br>RP19 DOC TECHNIQUE ADDITIF<br>RP19 TECHNISCHE DOKUMENTATION ZUSATZ<br>RP19 DOCUMENTAZIONE TECNICA ADDITIVO<br>RP19 DOCUMENTACION TECNICA ADITIVO | 35089640 |
| CDROM ICC19 VERSION 2<br>CDROM ICC19 VERSION 2<br>CDROM ICC19 VERSION 2<br>CDROM ICC19 VERSION 2<br>CDROM ICC19 VERSION 2 | 35075700 |
| 52RW64E PARTS LIST<br>52RW64E LISTA DE PIECES DETACHEES<br>52RW64E ERSATZTEILLISTE<br>52RW64E LISTA PARTI DI RICAMBIO<br>52RW64E LISTA DE PIEZAS DE REPUESTO | 35094280 |
| RP C19-S4 UM TH D/F/I/E/GB/NL/S/DK/ PL/CZ/H/SK/RU/GR/P<br>RP C19-S4 NU TH D/F/I/E/GB/NL/S/DK/ PL/CZ/H/SK/RU/GR/P<br>RP C19-S4 BA TH D/F/I/E/GB/NL/S/DK/ PL/CZ/H/SK/RU/GR/P<br>RP C19-S4 IU TH D/F/I/E/GB/NL/S/DK/ PL/CZ/H/SK/RU/GR/P<br>RP C19-S4 IU TH D/F/I/E/GB/NL/S/DK/ PL/CZ/H/SK/RU/GR/P | 25424710 |
| 52RW64E UM TH D/F/I/E/GB/NL/S/DK/ PL/CZ/H/SK/RU/GR/P<br>52RW64E NU TH D/F/I/E/GB/NL/S/DK/ PL/CZ/H/SK/RU/GR/P<br>52RW64E BA TH D/F/I/E/GB/NL/S/DK/ PL/CZ/H/SK/RU/GR/P<br>52RW64E IU TH D/F/I/E/GB/NL/S/DK/ PL/CZ/H/SK/RU/GR/P<br>52RW64E IU TH D/F/I/E/GB/NL/S/DK/ PL/CZ/H/SK/RU/GR/P | 25392060 |



The description and characteristics given here are of informative significance only, and non committal. To keep up the high quality of our products, we reserve the right to make any changes or improvement without previous notice. • Les descriptions et caractéristiques figurant sur ce document sont données à titre d'information et non d'engagement. En effet, soucieux de la qualité de nos produits, nous nous réservons le droit d'effectuer, sans préavis, toute modification ou amélioration. • Die Beschreibungen und Daten in dieser Anleitung dienen nur zur Information und sind nicht bindend. Um die Qualität unserer Produkte ständig zu verbessern, behalten wir uns das Recht auf Änderungen vor. • Le descrizioni e le caratteristiche date su questo documento sono fornite a semplice titolo informativo e senza impegno. Ci riserviamo il diritto di eseguire, senza preavviso, qualsiasi modifica o miglioramento. • Las descripciones y características que figuran en este documento se dan a título de información y no de compromiso. En efecto, en bien de la calidad de nuestros productos, nos reservamos el derecho de efectuar, sin previo aviso, cualquier modificación o mejora.

THOMSON multimedia S.A au capital de 12375616000 FF - 46, Quai Alphonse Le Gallo 92648 Boulogne Cedex FRANCE - RCS NANTERRE B 333 773 174